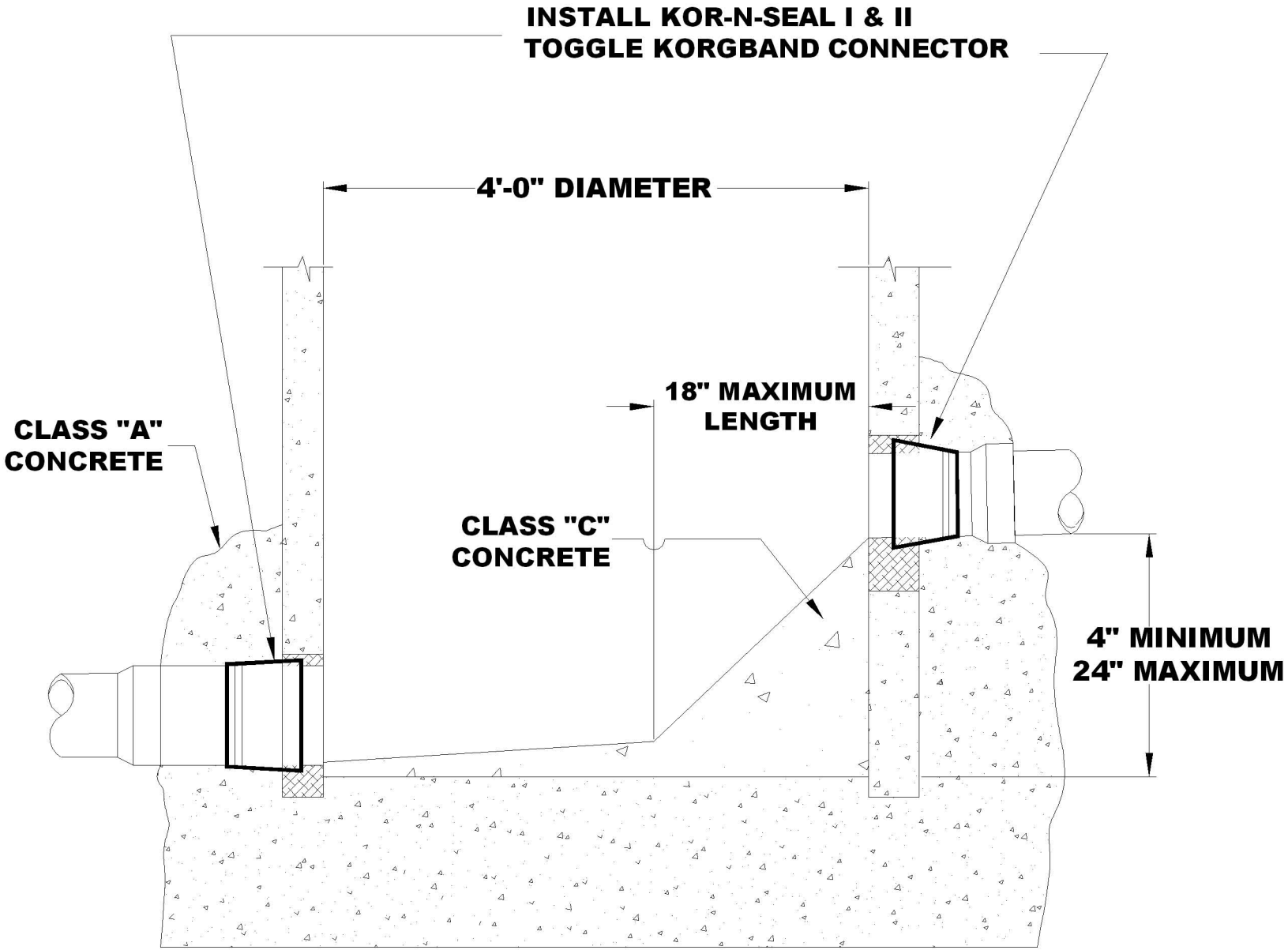

4" TO 24" DROP STRUCTURE INVERT DETAIL

NOTE: SEE STANDARD PRECAST MANHOLE FOR TYPICAL DEMENSIONS.

EASEMENT Cleanout LID

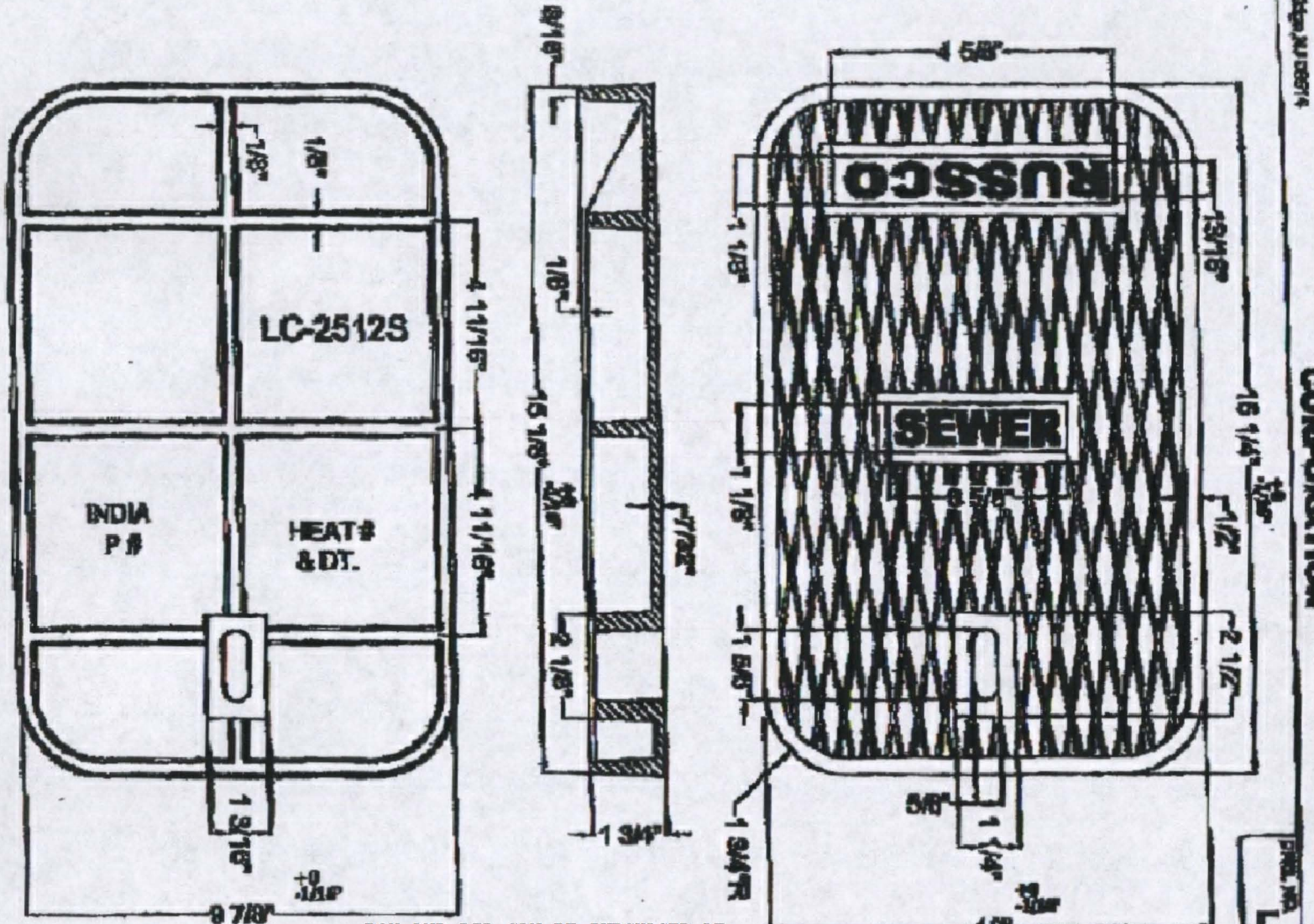

BOX AND LID CAN BE PURCHASED AT:
NATIONAL WATERWORKS
120 FERNCO DR.
NASHVILLE, TN 37207
615-226-9632 OFFICE
615-227-8676 FAX
MANGER: CHARLIE NORMAN 4/11/07

LC-2512S

Mid-States Plastics, Inc.

Customer Service: KY 800-444-7615 TX 800-521-6554
Fax: KY 859-498-7919 TX 936-760-1357
Web: www.msmeterboxes.com Email: productinfo@msmeterboxes.com

MSBC Series Meter Boxes

EASEMENT Cleanout BOX

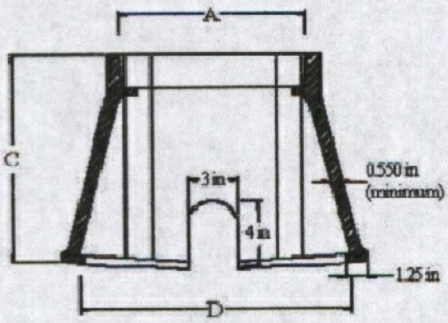

Short Side View

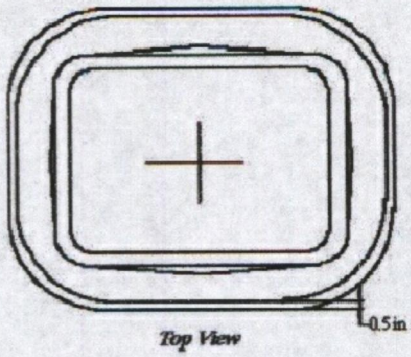

Top View

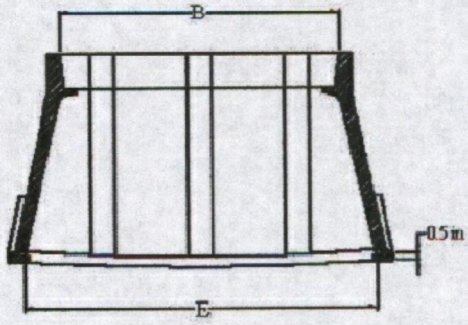

Long Side View

Part Number	A	B	C	D	E	Weight
MSBC1015-12	10.25"	15.5"	12"	15.5"	20.75"	13 lbs
MSBC1015-18	10.25"	15.5"	18"	15.5"	20.75"	20 lbs
MSBC1015-24	10.25"	15.5"	24"	15.5"	20.75"	26 lbs
MSBC1118-12	11.25"	18.125"	12"	16.75"	23.125"	18 lbs
MSBC1118-26	11.25"	18.125"	26"	16.75"	23.125"	30 lbs
MSBC1416-12	14.5"	16.5"	12"	17"	17.5"	14 lbs
MSBC1324-12	13.75"	23.1875"	12"	19"	27.625"	25 lbs
MSBC1730-18	17.625"	30.5"	18"	22.875	35"	40 lbs

All dimensions and weights are nominal and subject to change without notice

Typical Specification:

The meter box shall be high-density Polyethylene of one-piece molded construction for durability and impact strength with dimensions as shown in the referenced drawing. The meter box must have a minimum wall thickness of .550" and have been tested to withstand a 15,000 lb. vertical load freestanding and a 200lb side load, applied with a 4"x4" plate 1" down for the top center of the box, without deflecting more than 1". All edges shall be clean and smooth for safety during handling and installation. Inner and outer walls are to be smooth with a bright white interior to ease meter reading with a black exterior to retard UV degradation. The meter box shall an anti-settling flange on the bottom for stability and pre-molded pipe entry areas on each end. The box shall weigh no more than listed weight for each meter size for safety and ease of handling, transport and installation. The meter box shall be MSBC style as manufactured by Mid-States Plastics Inc. or equal.

© Mid-States Plastics, Inc.♦ 280 Midland Trail, Mt. Sterling, KY 40353 ♦ 101 East Ave M, Conroe, TX 77301 0203

TRAFFIC BEARING Cleanout BOX

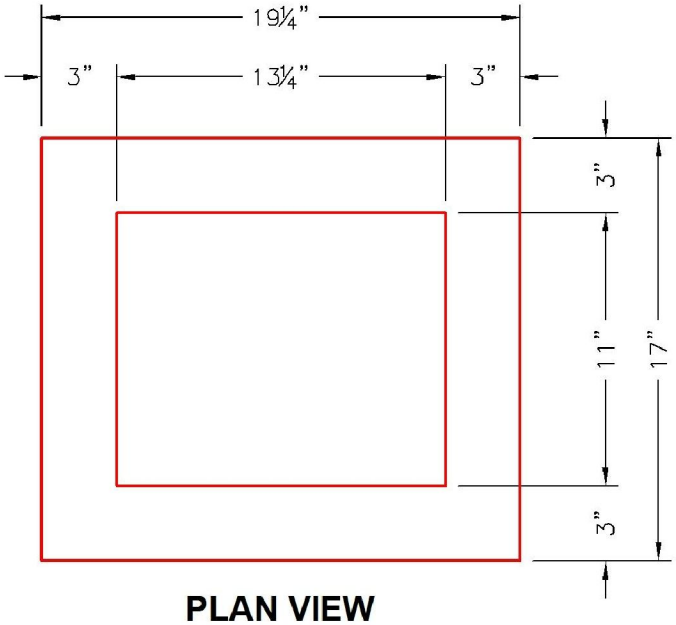

PLAN VIEW

Concrete: 4500 psi @ 28 Days

Weights:

2" GR – 32 Lbs.
4" GR – 63 Lbs.
6" GR – 95 Lbs.
12" Box – 189 Lbs.
18" Box – 283 Lbs.

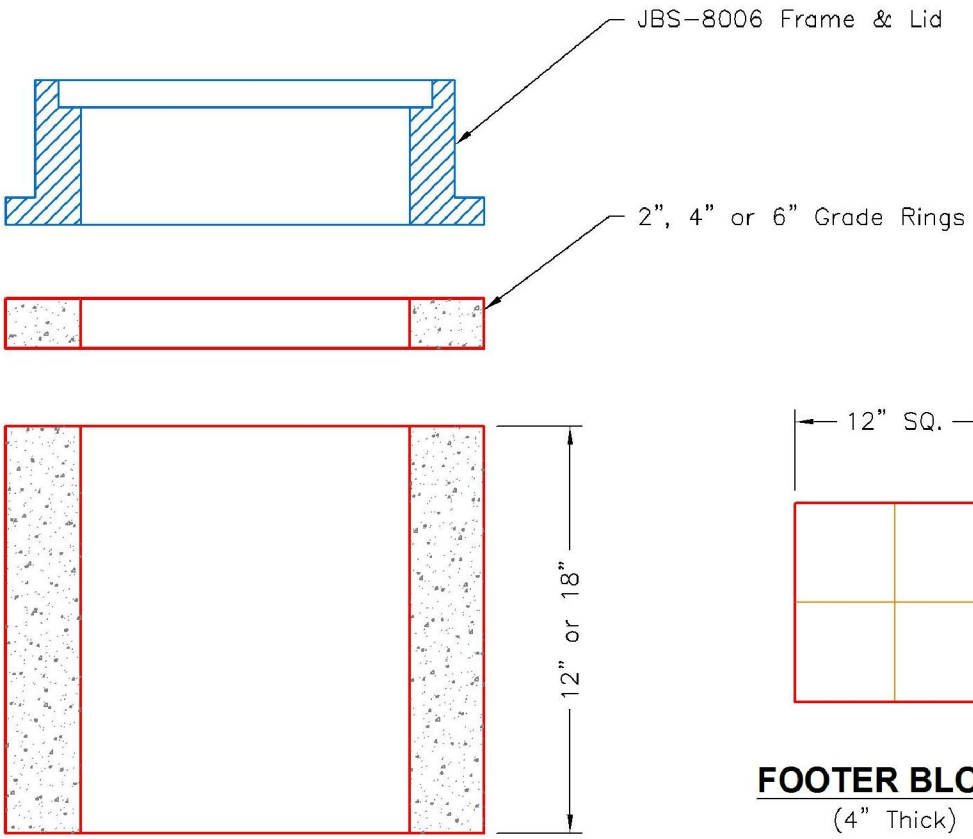

SECTION VIEW

FOOTER BLOCK

(4" Thick)

SCALE: 1 1/2" = 1'–0"

Oldcastle Precast®

Cloud Concrete Products

125 International Blvd., LaVergne, TN 37086
Phone: 615–793–1920 Fax: 615–793–9625

VALVE

FILE NAME: 382UWMVALVE_DET.DWG

ISSUE DATE: January 2002

www.oldcastleprecast.com

Valve Box

Part # UT–045

Copyright © 2002 Oldcastle Precast, Inc.

Traffic Bearing Cleanout Frame & Cover

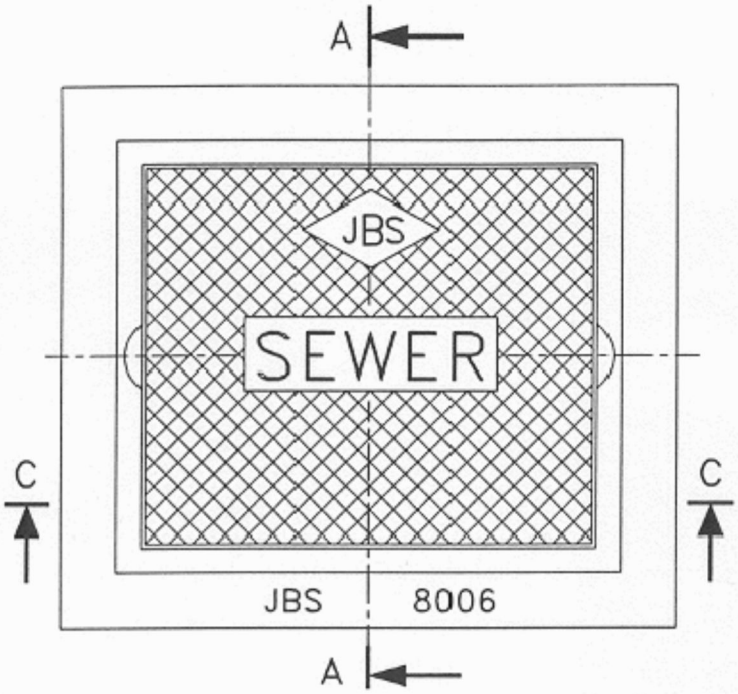

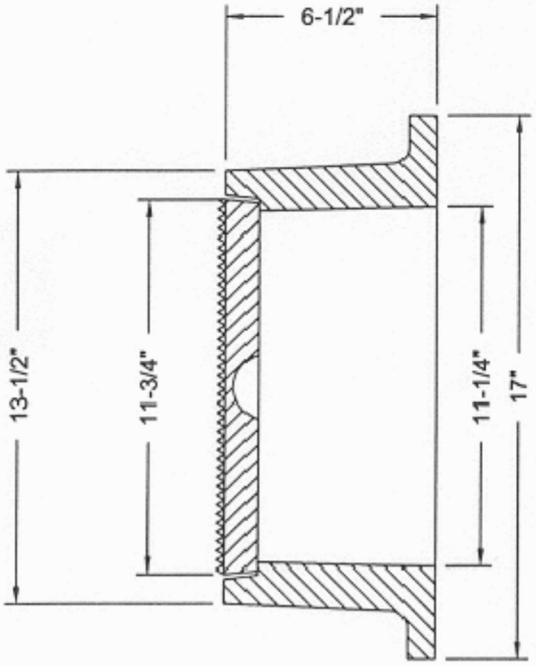

SECTION A – A

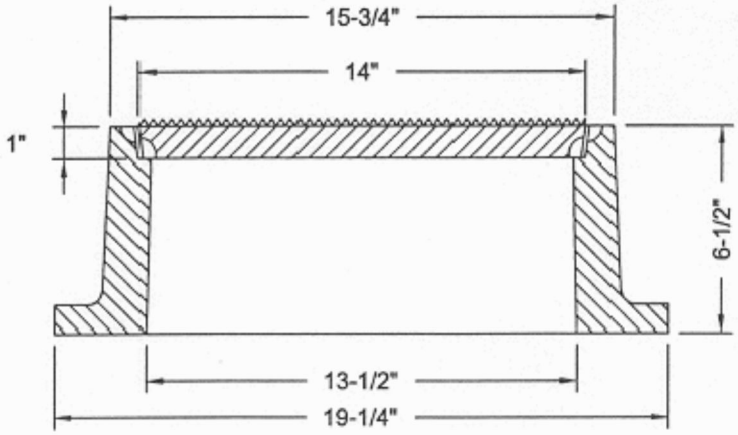

SECTION C – C

METRO STANDARD
TRAFFIC DUTY

John Bouchard & Sons Co.
1024 Harrison Street, Nashville, TN 37203
Tel: 615-256-0112 Fax: 615-327-2427

8006 FRAME & COVER

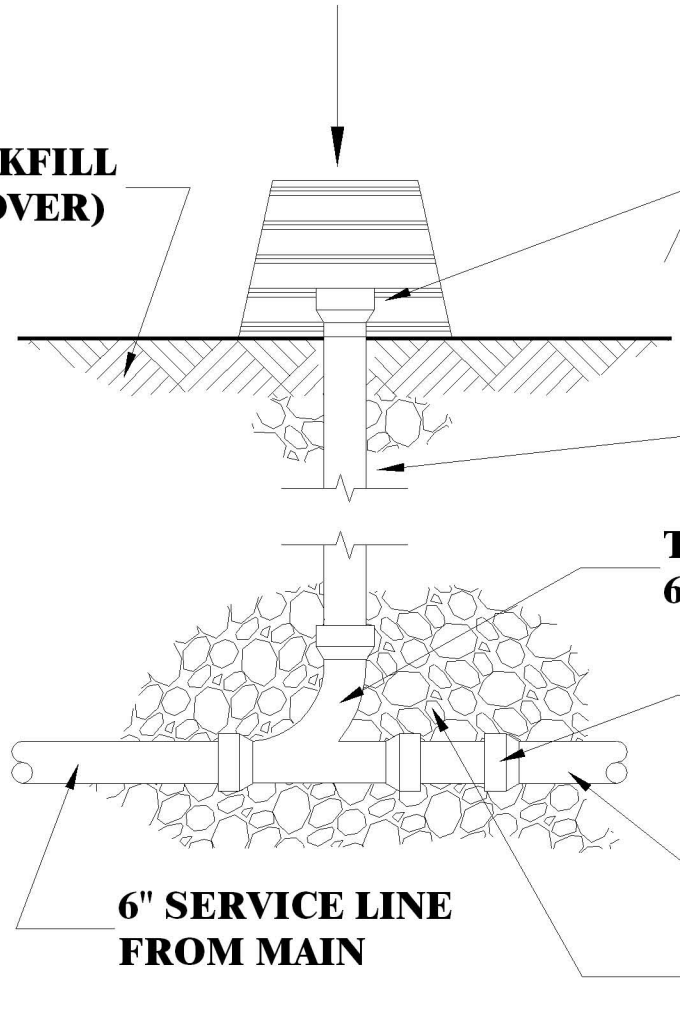

NOTES:

1. ALL FITTINGS AND LINES TO BE P.V.C. SOLVENT WELD (STANDARD DIMENSION RATION 35)
2. WHEN SERVICE LINE FROM MAIN LINE IS 4", ALL FITTINGS AND LINES TO BE 4" (SCHEDULE 40).

CLEANOUT

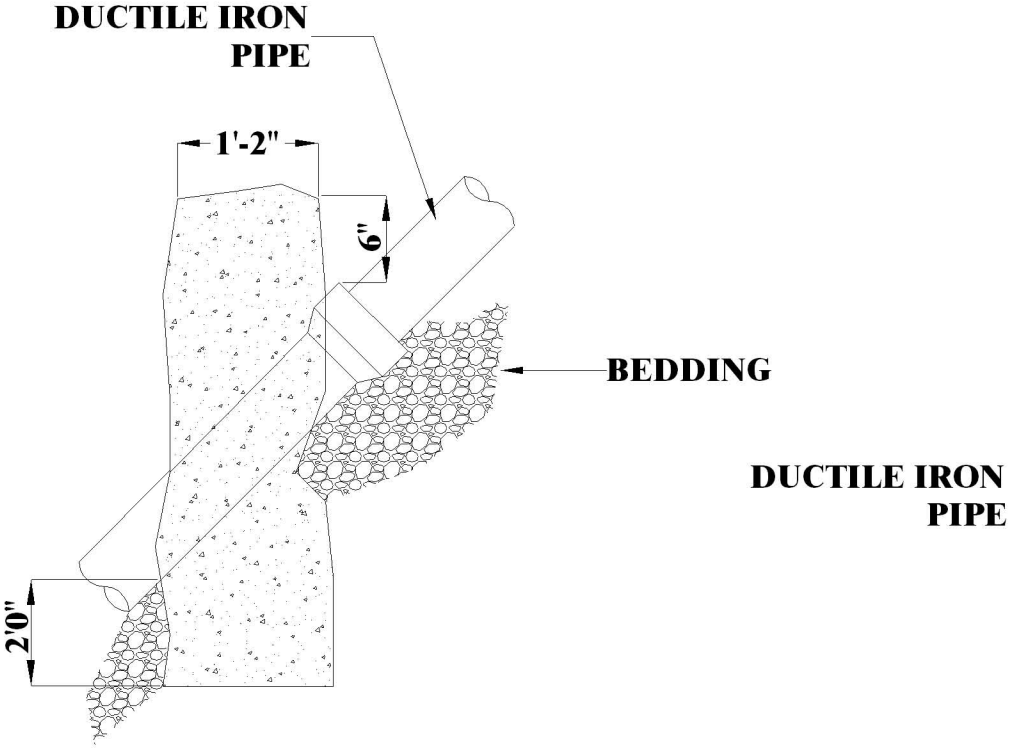

SECTIONAL VIEW

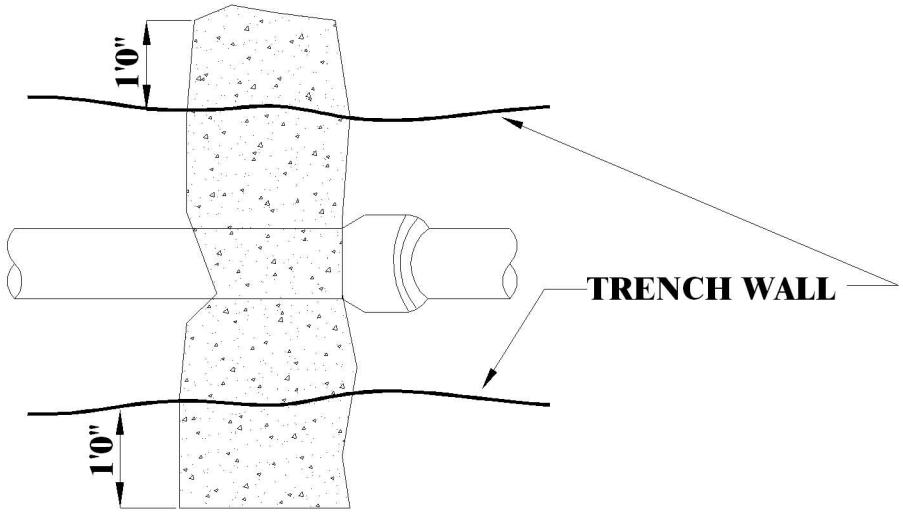

PLAN VIEW

DUCTILE IRON
PIPE

COLLAR DETAIL

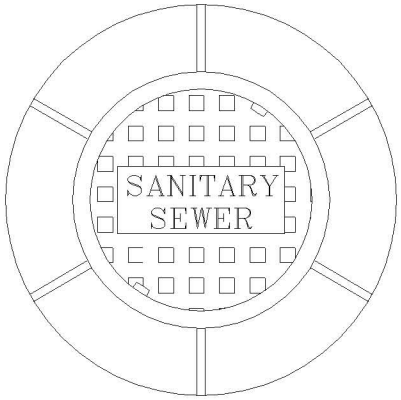

TRAFFIC:
JOHN BOUCHARD & SONS #1150

PLAN

APPROXIMATE FRAME &
COVER WEIGHT: 415 LBS.
TRAFFIC (JOHN BOUCHARD & SONS)

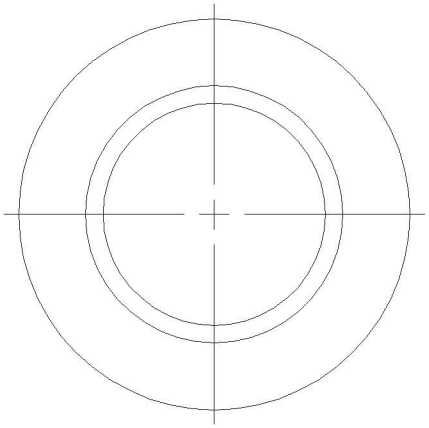

PLAN

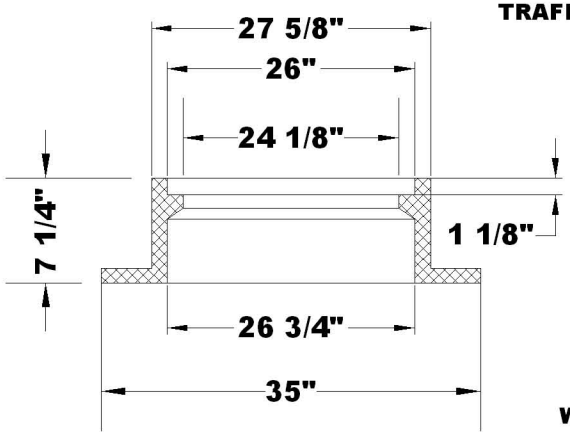

FRAME

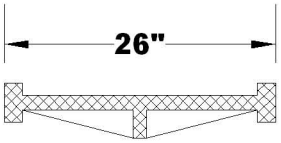

COVER

STANDARD TYPE

WATERTIGHT:
JOHN BOUCHARD & SONS
#1123

APPROXIMATE FRAME &
COVER WEIGHT: 535 LBS.

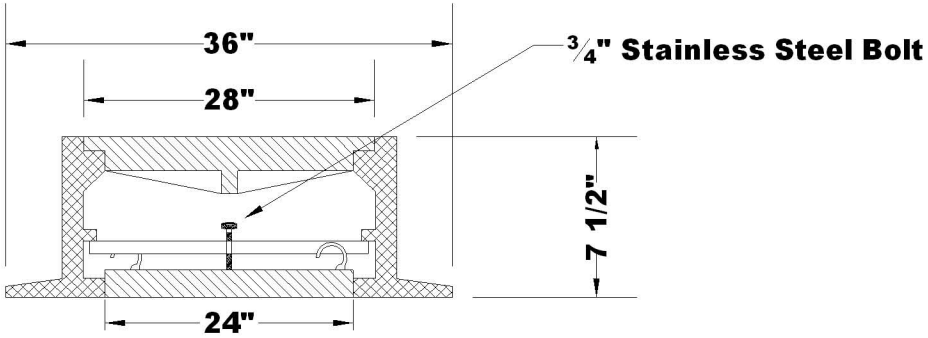

FRAME & COVER

WATERTIGHT TYPE

MANHOLE FRAMES AND COVERS

NOT TO SCALE

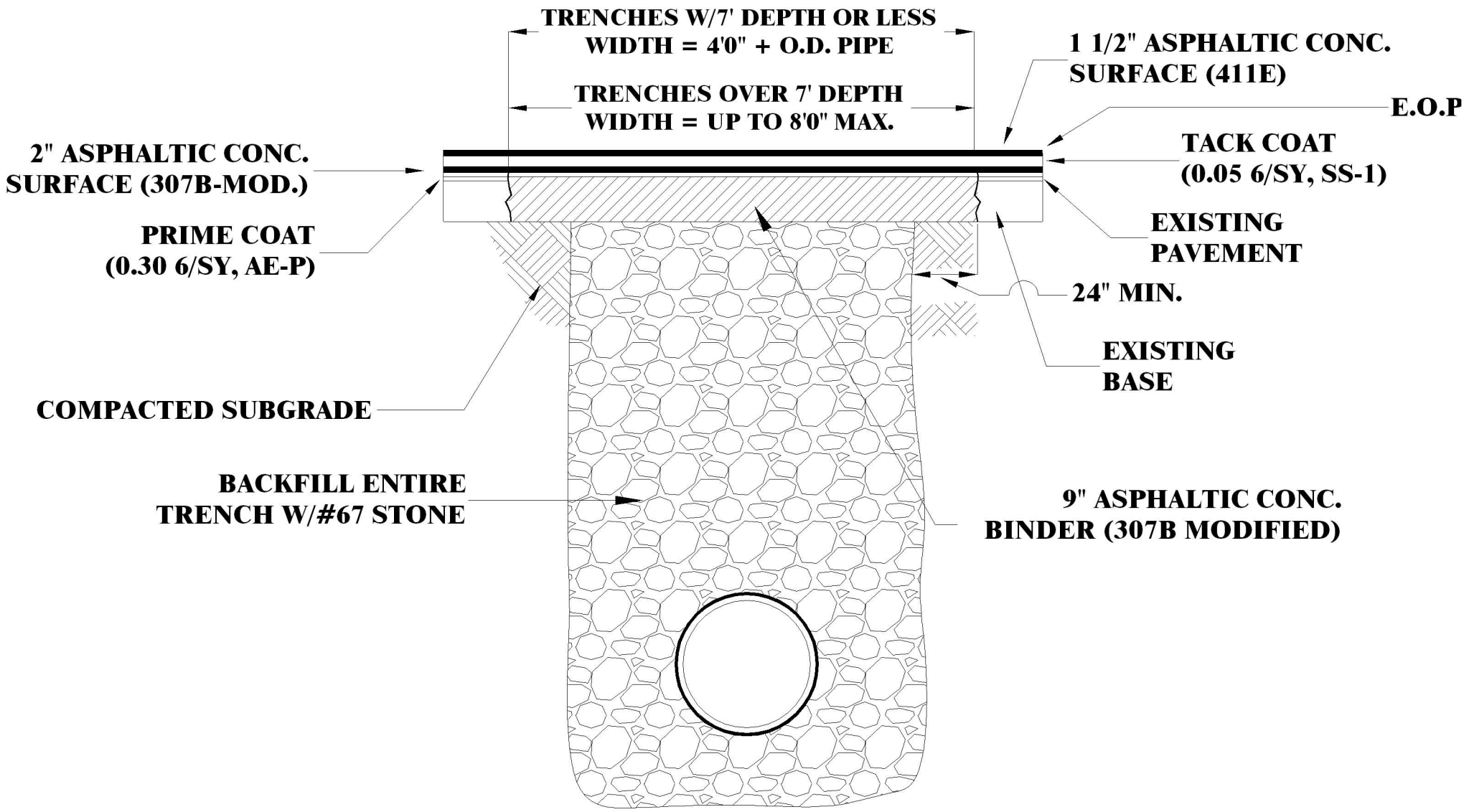

FULL WIDTH PAVEMENT REPLACEMENT

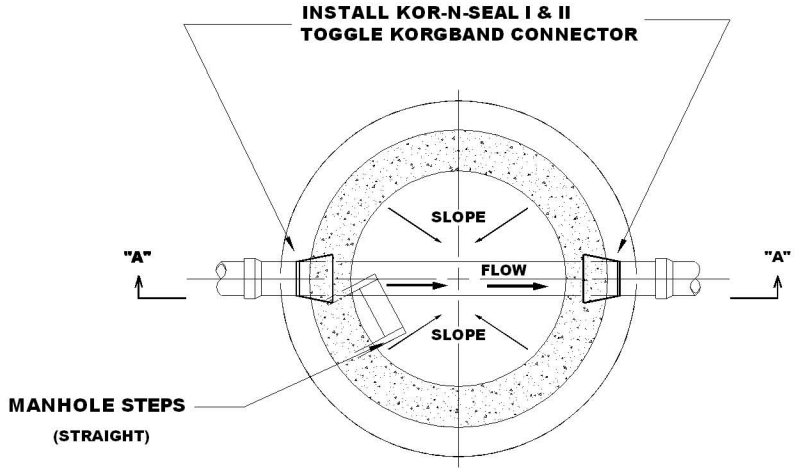

PLAN VIEW

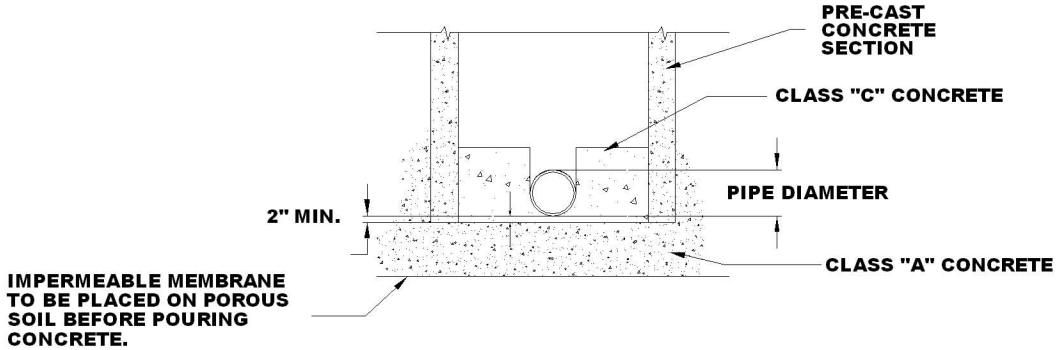

ELEVATION SECTION "B-B"

NOTE: CONCRETE WILL BE READY MIX AND SHALL COMPLY WITH THE SPECIFICATIONS ASTM DESIGNATION 94 FOR THE CLASSES A, B, AND C AS OUTLINED IN THE STANDARD SPECS.

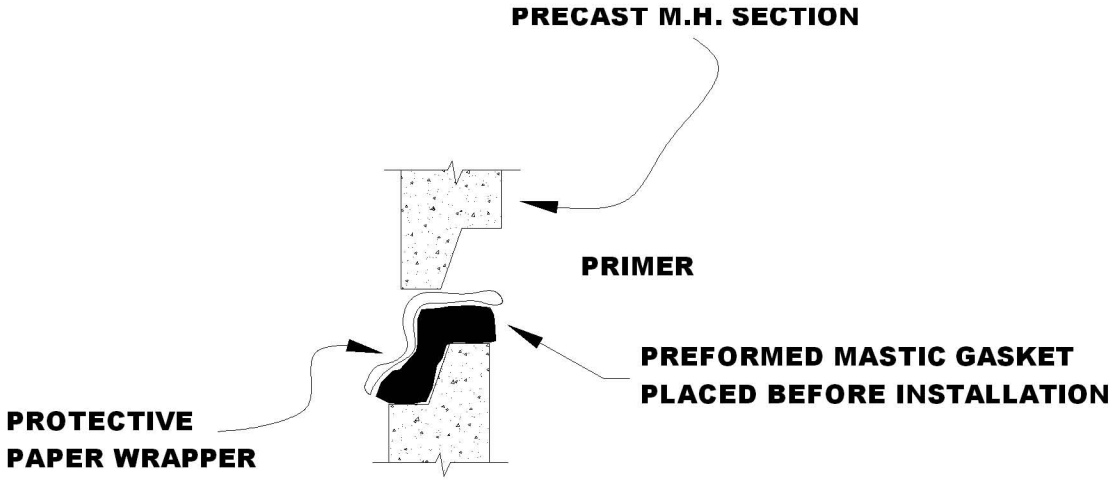

OPEN JOINT

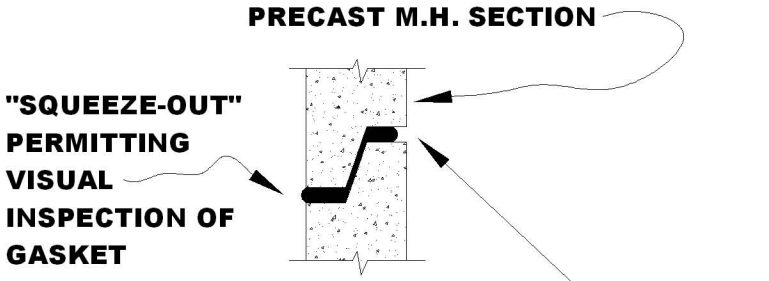

CLOSED JOINT

NOTE: WHERE MASTIC DOES NOT PROTRUDE, EITHER INSIDE OR OUTSIDE, POINT UP JOINT WITH GROUT.

DETAILS OF MASTIC GASKET FOR PRECAST MANHOLE SECTIONS

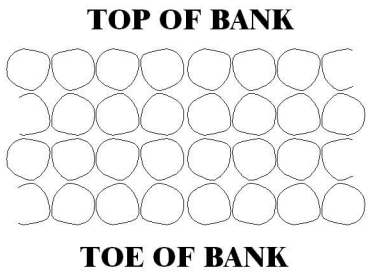

PLAN VIEW

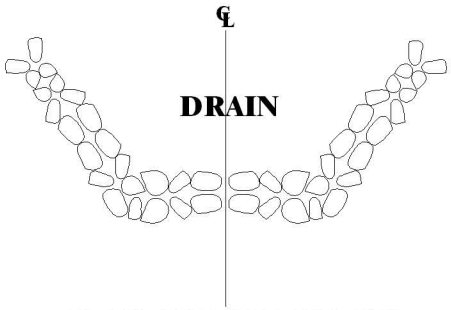

SECTIONAL VIEW

NOTE: FACE OF RIP-RAP IS TO BE FLUSH WITH SIDES AND BOTTOM OF DRAIN

RIP-RAP STABILIZATION WHERE NOTED WILL CONSIST OF HAND-PLACED NATIVE LIMESTONE, HAVING A MAXIMUM LENGTH/WIDTH DIMENSION OF 12" IN EITHER DIRECTION AND A MAXIMUM THICKNESS OF 6". TREATMENT WILL BE PLACED IN TWO INTERLOCKING (NESTING) LAYERS. RIP-RAP SHALL BE PLACED FOR THE FULL WIDTH OF AREA DISTURBED BY PIPE LAYING OPERATIONS. LIMIT OF WIDTH FOR PAYMENT OF RIP-RAP SHALL BE AS FOLLOWS:

PIPE DIAMETER	RIP-RAP WIDTH
8"	5'
10"	5.5'
12"	6'
15"-16"	8'
18"	8.5'
21"	9'
24"	10'

RIP-RAP DETAIL

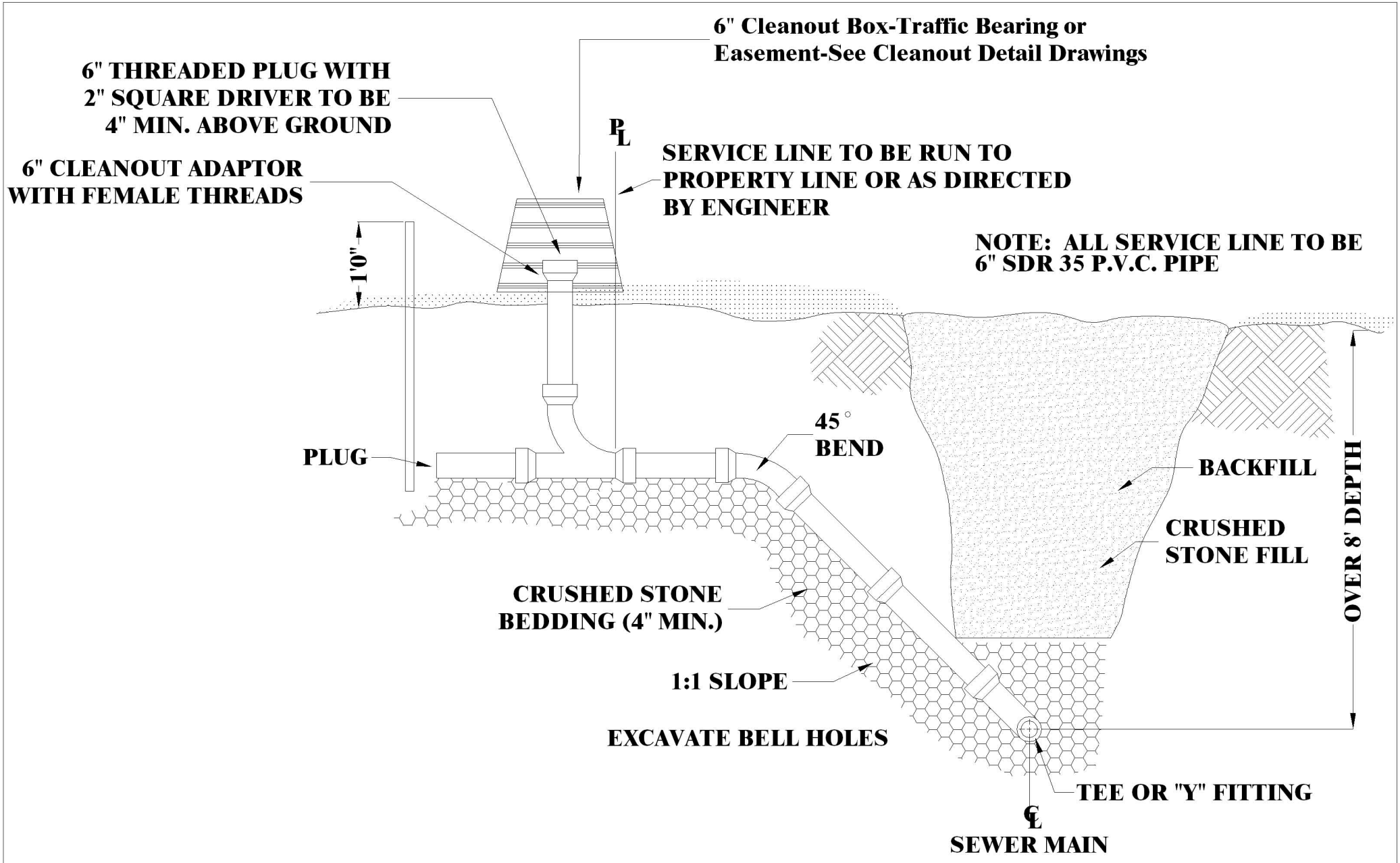

SERVICE LINE DETAIL FOR DEEP TRENCHES

(ONLY WHEN CALLED FOR ON PLANS OR DIRECTED BY CITY ENGINEER)

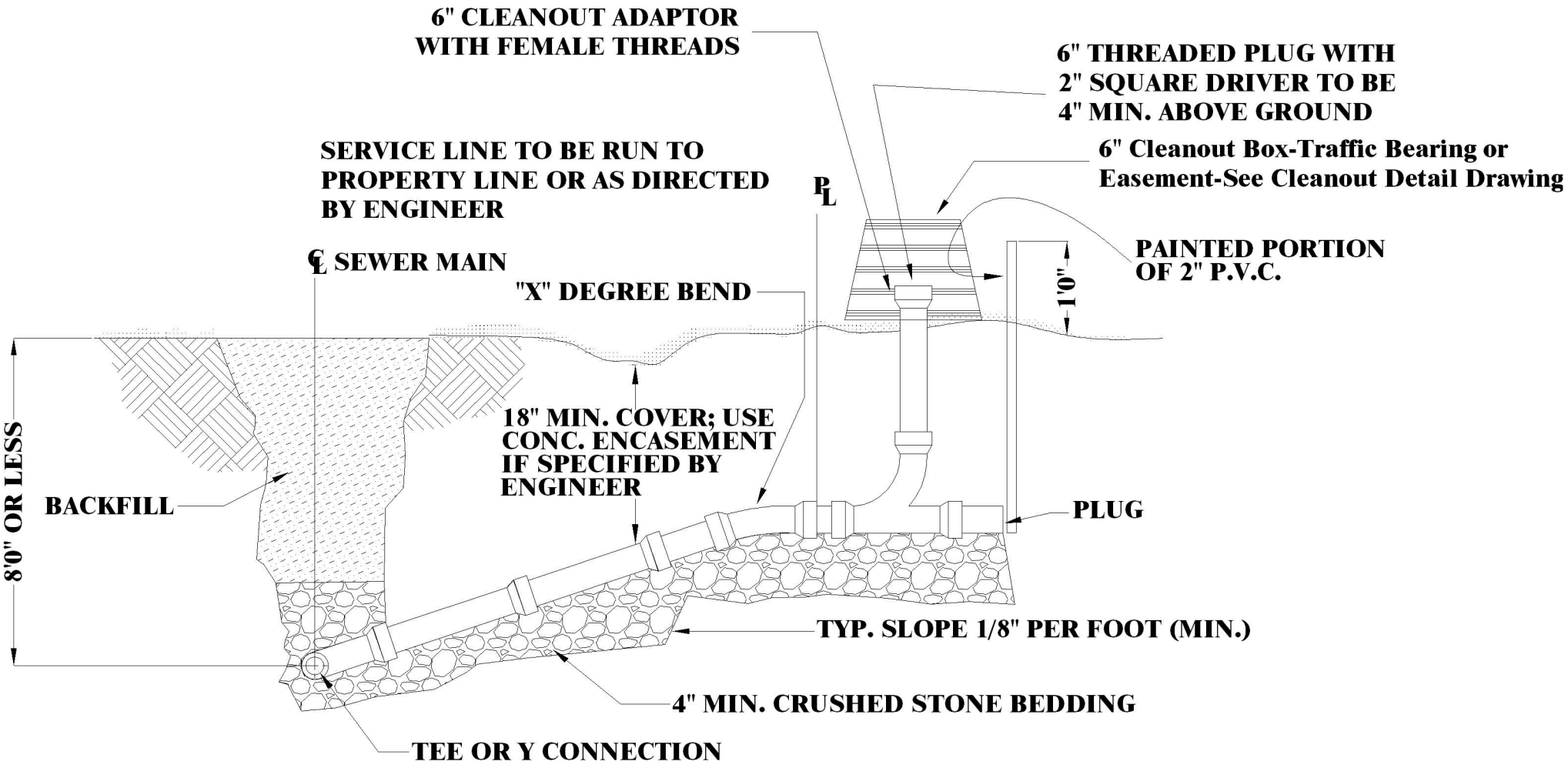

TYPICAL SERVICE LINE DETAIL

1. BACKFILL ON SERVICE LINES TO BE AS DESCRIBED IN PROJECT SPECS.

2. SERVICE LINES FOR DEEP TRENCHES TO BE USED WHERE SHOWN ON PLANS OR AS DIRECTED BY ENGINEER. SERVICE FOR DEEP TRENCHES SHALL BE CONSTRUCTED AS SHOWN IN DETAIL ABOVE IN LIEU OF VERTICAL STACKS ENCASED IN CONCRETE.

3. BATTER BOARDS NO REQUIRED FOR LAYING PIPE, BUT GRADE TO BE REASONABLY UNIFORM AND ALIGNMENT STRAIGHT. GRADE SHALL BE THAT WHICH IS SUFFICIENT TO PROVIDE SERVICE TO BUILDING OR AS DIRECTED BY ENGINEER WITH MINIMUM TO BE THAT ALLOWED BY LOCAL PLUMBING CODE OR 1/8" PER FOOT MINIMUM OR AS NOTED ON PLANS.

4. MARKING ROD SHALL EXTEND FROM BOTTOM OF END OF SERVICE LINE TO 1'0" ABOVE GROUND.

SERVICE LINE TRENCHING DETAILS

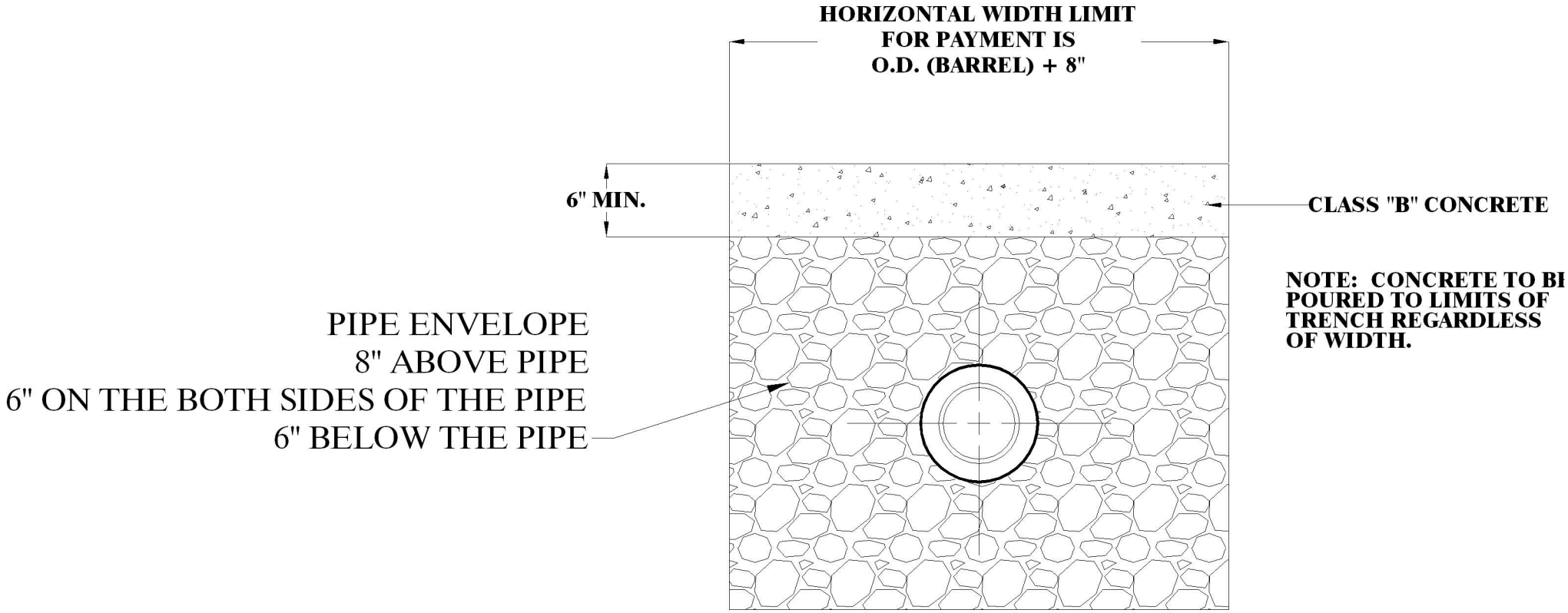

STANDARD CONCRETE CAP

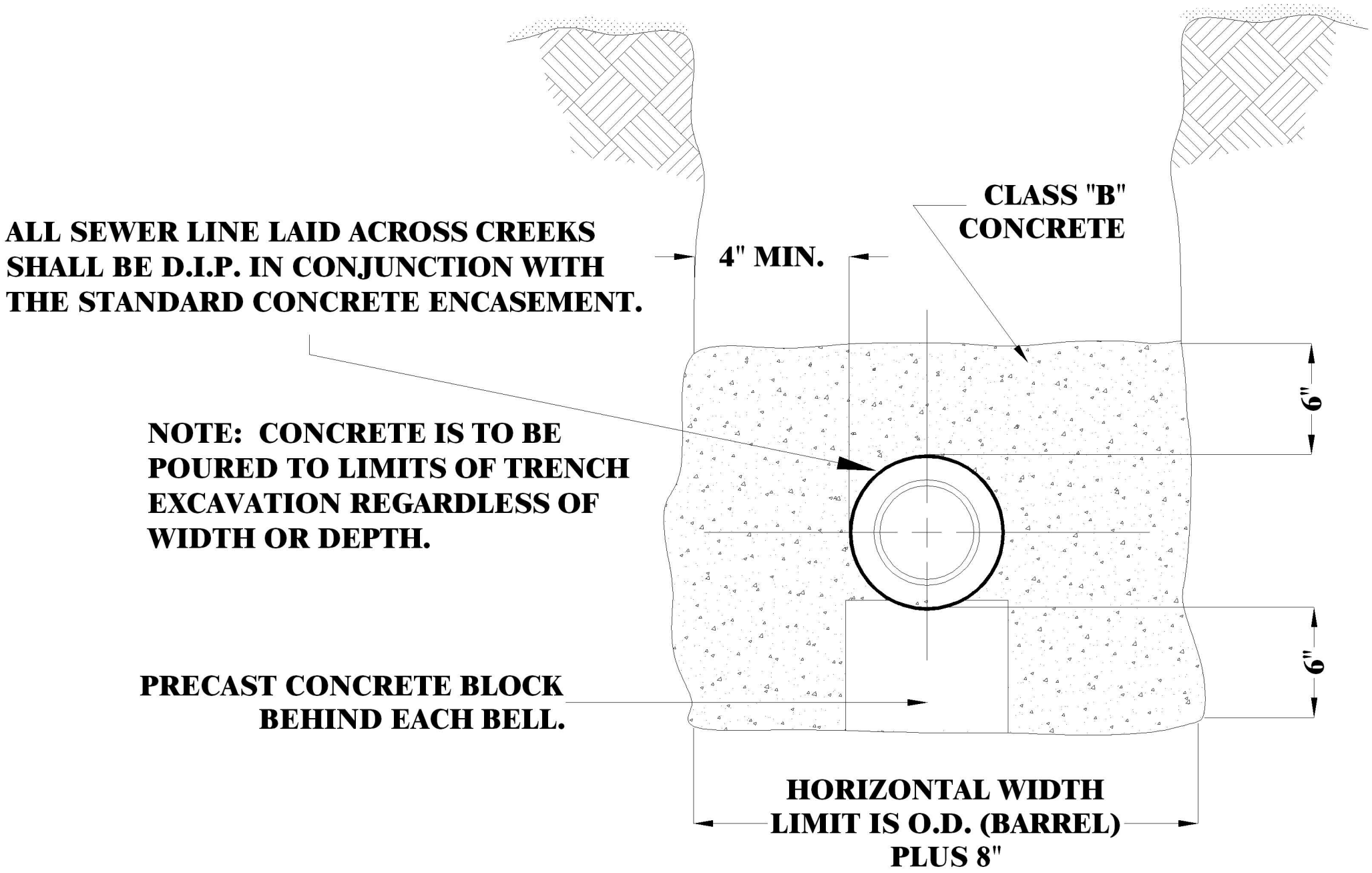

STANDARD CONCRETE ENCASEMENT

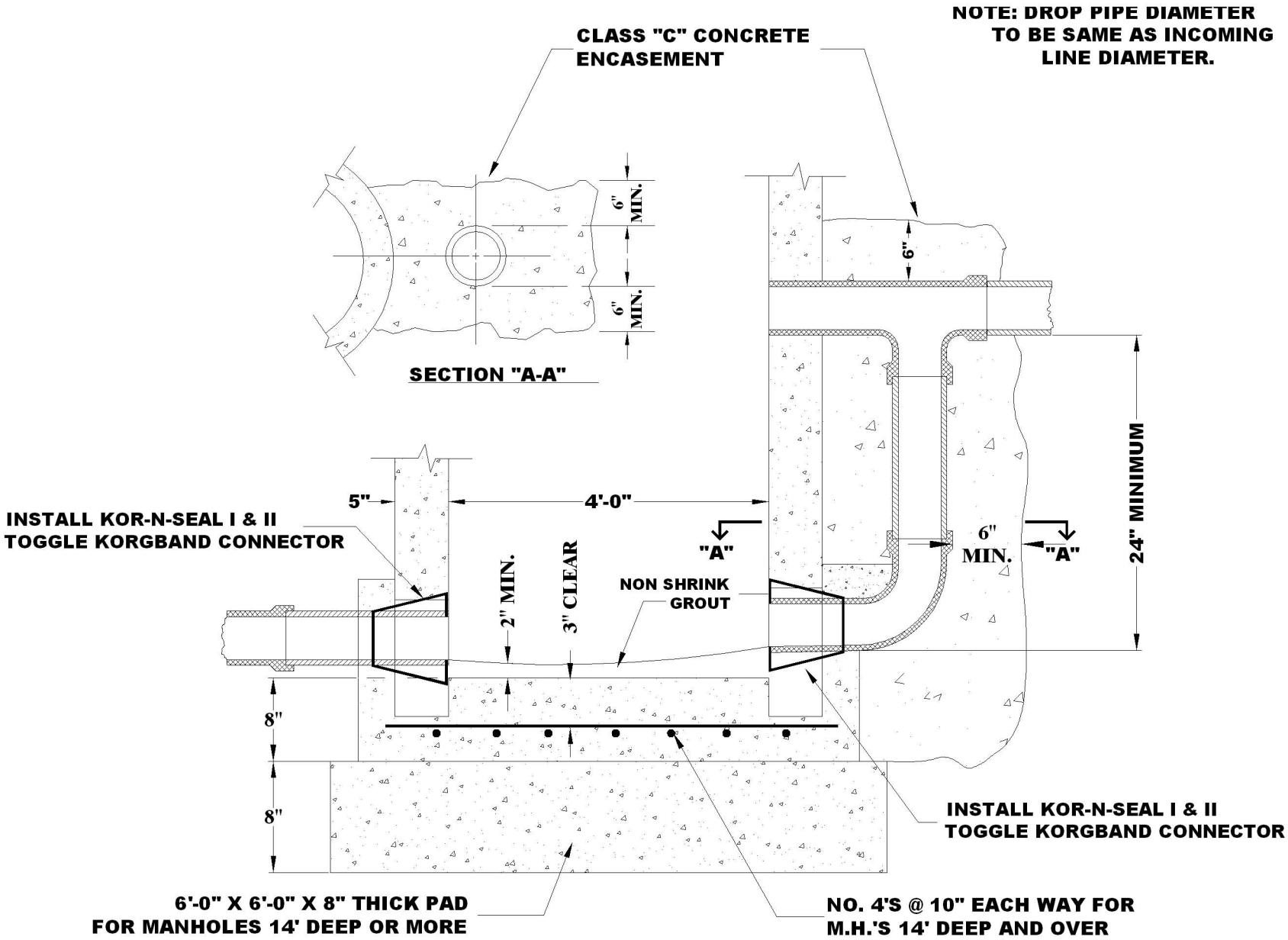

STANDARD DROP STRUCTURE

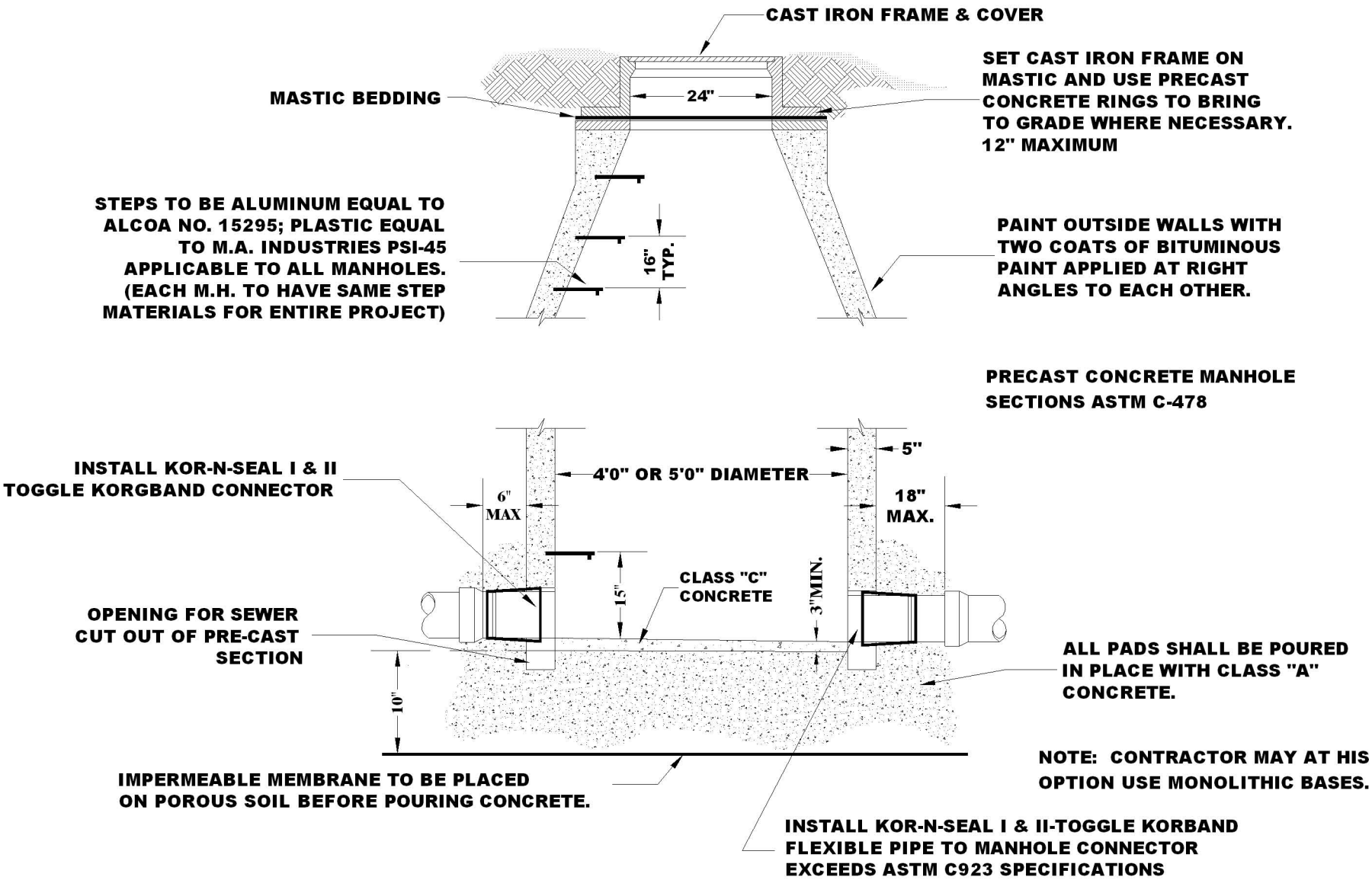

STANDARD PRECAST MANHOLE (A-A)

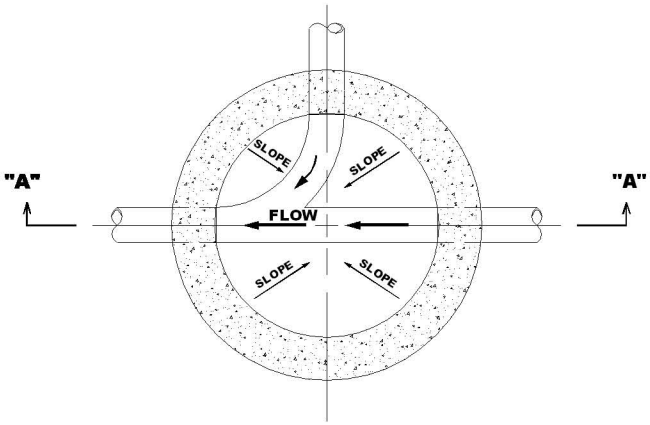

PLAN VIEW

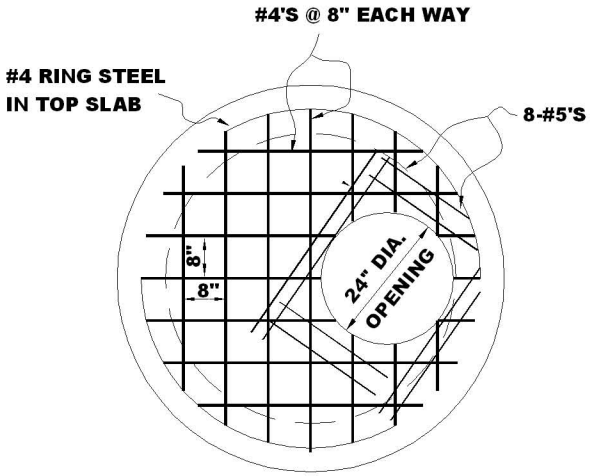

TOP SLAB REINFORCING BARS

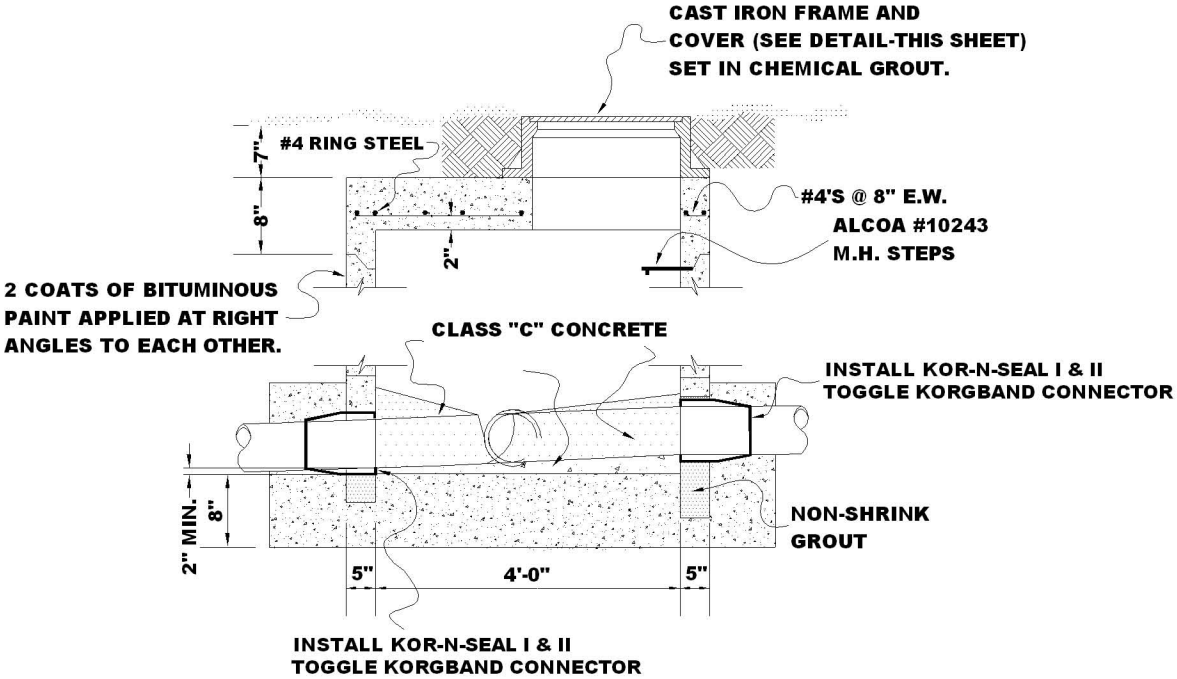

STANDARD SHALLOW MANHOLE (A-A)

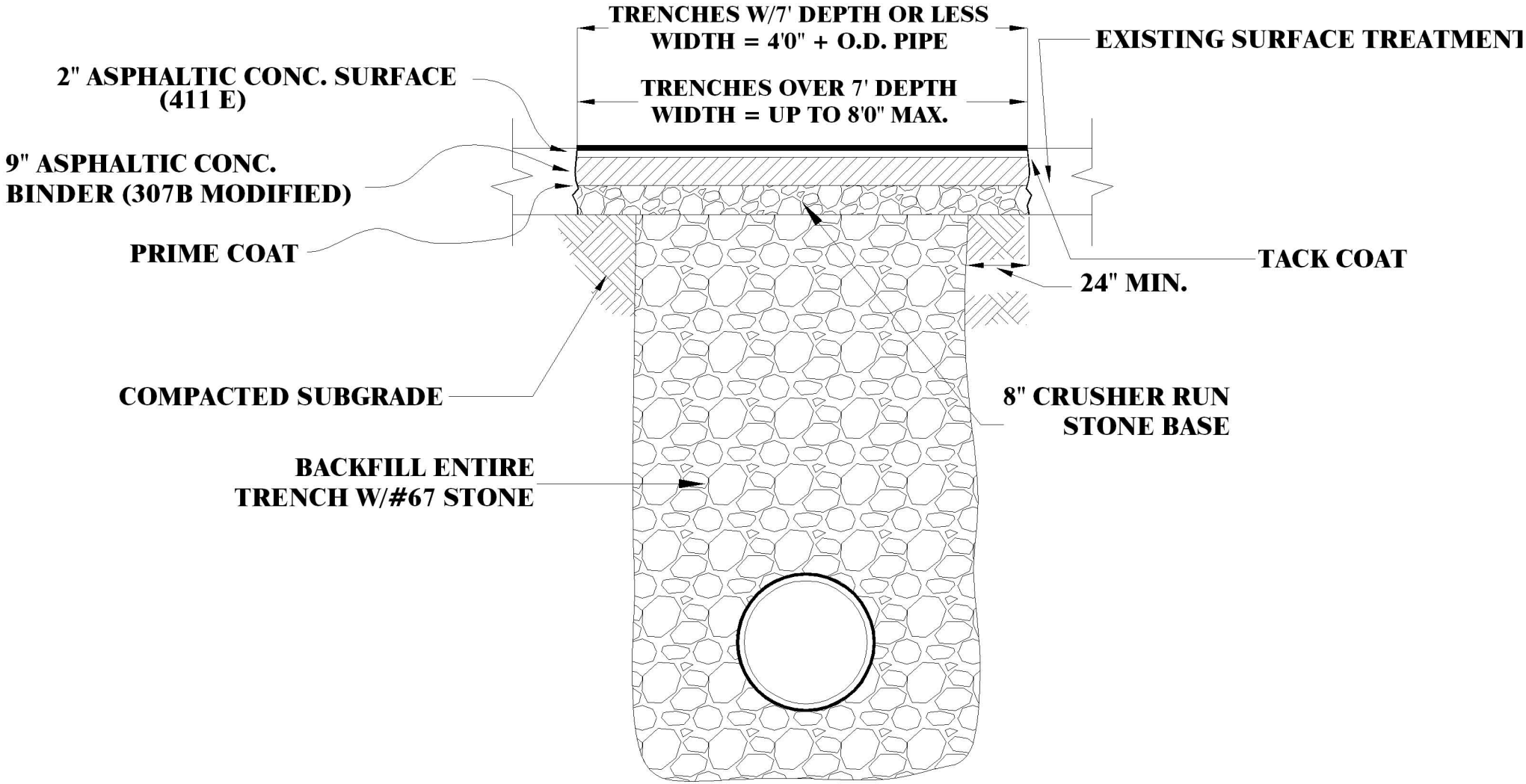

ASPHALTIC CONCRETE SURFACE

TRENCH REPAIR PAVEMENT REPLACEMENT

BACKFILL MATERIAL TO BE LEFT ROUNDED TO A MIN. OF 3" ABOVE ADJACENT GROUND LINE

THE ENTIRE PIPE ENVELOPE SHALL CONSIST OF CRUSHED STONE #67 OR APPROVED EQUAL

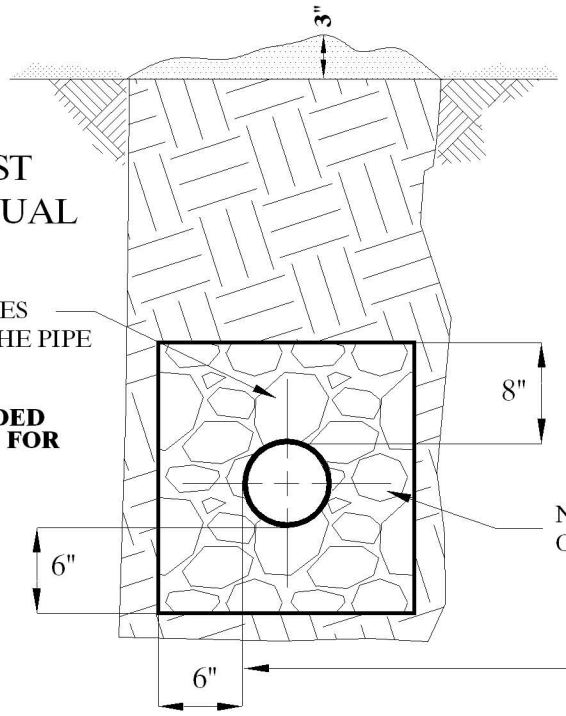

SELECTED BACKFILL MATERIAL TO BE PUT BACK INTO TRENCH IN 12" LIFTS AND SHALL CONTAIN NO STONE MATERIAL LARGER THAN 6" IN ANY DIMENSION. BACKFILL MAY BE PLACED WITHOUT TAMPING, BUT THE BACKFILL SHALL BE COMPACTED TO A DENSITY EQUIVALENT TO THAT WHICH WILL RESULT FROM SPREADING BY A DOZER THEREON. THE CONTRACTOR SHALL EXERCISE CAUTION TO PREVENT DAMAGE TO THE SEWER FROM THE OPERATION OF BACKFILL EQUIPMENT. BACKFILL TO A POINT 24" ABOVE THE TOP OF THE PIPE WILL CONTAIN NO STONE MATERIAL LARGER THAN 6" IN ANY DIMENSION.

TYPICAL TRENCH

NON-TRAFFIC AREAS
OUTSIDE OF ROADWAY

INSERTION OF VENT PIPE INTO MANHOLE

MANHOLE CONE TO BE PRECAST FOR INSERTION OF VENT PIPE OR CONE CAN BE CORE DRILLED. USE KOR-N-SEAL I & II TOGGLE KORGBAND CONNECTOR FOR WATERTIGHT FIT.

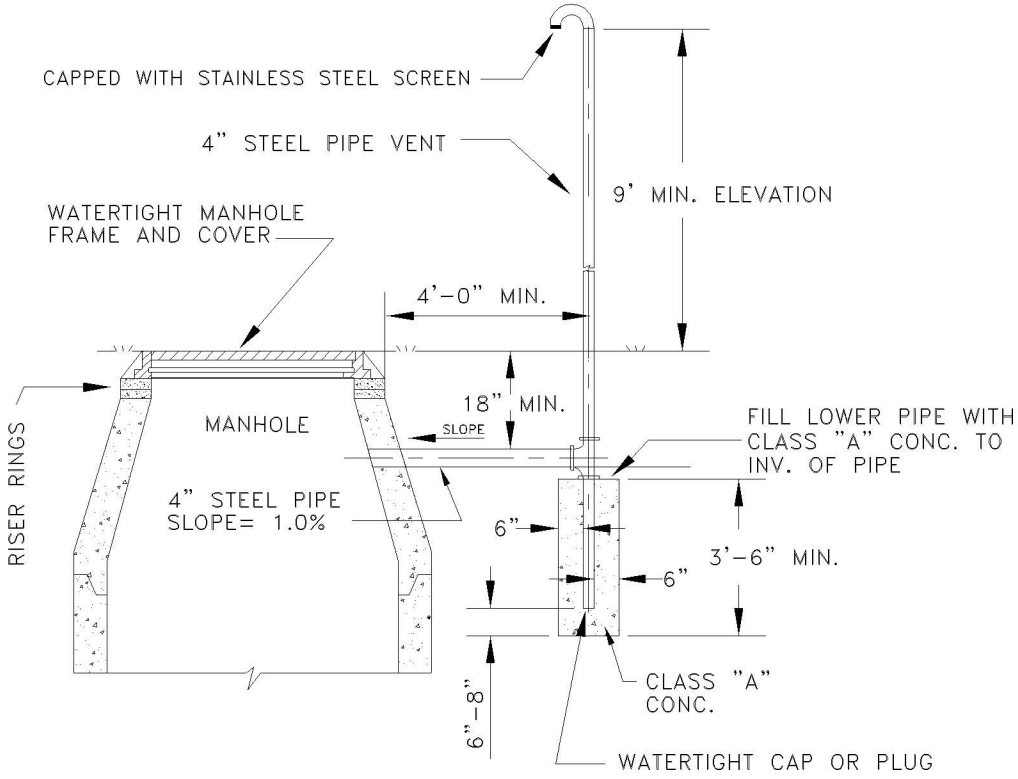

PIPE LOCATION & FINISH

VENT PIPE SHALL BE LOCATED OUT OF A TRAVEL WAY, IN BACK OF A CURB OR SIDEWALK, OR AS CALLED FOR ON PLANS. PIPE SURFACE PREPARATION SHALL BE DONE USING SSPC-SP10 NEAR-WHITE BLAST CLEANING. ONLY ONE COAT IS REQUIRED: TNEMEC 435 PERMA-GLAZE AT 30.0 - 40.0 MILS D.F.T.

CITY OF GOODLETTSVILLE, TENNESSEE SEWER DEPARTMENT	VENT PIPE ASSEMBLY DETAILS	DEPARTMENT OF PUBLIC WORKS Goodlettsville
NOT TO SCALE — 3/1/06		