SPECIFICATIONS FOR WASTEWATER

CITY OF GOODLETTSVILLE, TENNESSEE

MARCH 2010

SPECIFICATIONS FOR SANITARY SEWERS

THE CITY OF GOODLETTSVILLE, TENNESSEE

TABLE OF CONTENTS

GENERAL REQUIREMENTS

SPECIFICATIONS

DIVISION I

Section 01090 Reference Standards
Part 1 General
1.1 Requirements Included 01090-1
1.2 Quality Assurance 01090-1
1.3 Abbreviations, Names and Addresses of Organizations 01090-1

Section 01410 Testing Laboratory Services
Part 1 General
1.1 Requirements Included 01410-1
1.2 Related Sections 01410-1
1.3 Laboratory Duties 01410-1
1.4 Limitations of Authority of Testing Laboratory 01410-2
1.5 Contractor's Responsibilities 01410-2

Part 2 Products
(Not Used)

Part 3 Execution
3.1 Material Tests 01410-3

Section 01560 Temporary Controls
Part 1 General
1.1 Requirements Included 01560-1
1.2 Related Sections 01560-1
1.3 Unit Prices 01560-1
1.4 Dust Control 01560-1
1.5 Water Control 01560-1
1.6 Debris Control 01460-2
1.7 Pollution Control 01560-2
1.8 Erosion of Spoil Materials 01560-2
1.9 Disposal of Spoil Material 01560-3
1.10 Office of Contractor 01560-3
1.11 Work in Streets and Alleys 01560-3
1.12 Work in Vicinity of Existing Sewers 01560-3
1.13 Traffic Control 01560-4

Part 2 Products
2.1 Materials, General 01560-4
2.2 Barriers 01560-4

Part 3 Execution
3.1 General - Barriers and Signs 01560-4
3.2 Removal - Barriers and Signs 01560-4
3.3 Dust Control 01560-4

Section 01710 Cleanup and Restoration

Part 1 General
1.1 Summary 01710-1
1.2 Related Sections 01710-1

Part 2 Products
(Not Used)

Part 3 Execution
3.1 Cleanup and Restoration 01710-1

Section 01720 Project Record Documents

Part 1 General
1.1 Requirements Included 01720-1
1.2 Related Sections 01720-1
1.3 Maintenance of Documents and Samples 01720-1
1.4 Submittal 01720-1

Part 2 Products
(Not Used)

Part 3 Execution
(Not Used)

DIVISION 2

Section 02222 Excavation

Part 1 General
1.1 Summary 02222-1
1.2 Related Sections 02222-1

Part 2 Products
(Not Used)

Part 3 Execution
3.1 Preparation of the Site 02222-1
3.2 Excavation 02222-2
3.3 Sheeting, Shoring and Bracing 02222-4

3.4 Dewatering Excavation 02222-5
3.5 Foundation Strengthening 02222-5
3.6 Use of Explosive 02222-6

Section 02223 Backfilling

Part 1 General
1.1 Summary 02223-1
1.2 Related Sections 02223-1
1.3 Reference Standards 02223-1
A. Tennessee Department of Transportation Standard

Part 2 Products
2.1 Materials
A. Force Sanitary Sewer and Force Mains
1. Outside Roadway 02223-1
2. Inside Roadway 02223-1

Part 3 Execution
3.1 General
A. Outside Roadways 02223-2
B. Inside Roadways 02223-2
C. Check Dams 02223-2
3.2 Installation
A. Force Sanitary Sewer and Force Mains
1. Outside of Roadway 02223-2
a. Bedding 02223-2
b. Backfill 02223-3
2. Inside of Roadway 02223-5
a. Bedding 02223-5
b. Backfill 02223-5
3. Gravel Refill 02223-6

Section 02270 Slope Protection and Erosion Control

Part 1 General
1.1 Summary 02270-1
1.2 Submittals 02270-1
1.3 Sequencing and Scheduling 02270-1

Part 2 Products
2.1 Materials
A. Temporary Berms 02270-1
B. Temporary Slope Drains 02270-1
C. Sediment Structures 02270-2
D. Check Dams 02270-2
E. Temporary Seeding and Mulching 02270-2
F. Brush Barriers 02270-2
G. Baled Hay or Straw Checks 02270-2
H. Temporary Silt Fences 02270-2
I. Rip-Rap Stone 02270-2

Part 3 Execution
3.1 Installation
A. Construction Requirements 02270-2
B. Construction of Temporary Berms 02270-3
C. Construction of Temporary Slope Drains 02270-3
D. Construction of Sediment Structures 02270-4
E. Construction of Check Dams 02270-4
F. Temporary Seeding and Mulching 02270-4
G. Brush Barriers 02270-4
H. Baled Hay or Straw Erosion Checks 02270-4
I. Construction of Temporary Silt Fences 02270-4

3.2 Maintenance 02270-5

3.3 Rubble Rip-Rap 02270-5
A. General 02270-5
B. Rubble Rip-Rap (Plain) 02770-5
C. Rubble Rip-Rap (Grouted) 02770-5

Section 02575 Pavement Replacement and Repair

Part 1 General
1.1 Summary 02575-1
1.2 Related Sections 02575-1
1.3 Reference Standards 02575-1

Part 2 Products
2.1 Materials 02575-1

Part 3 Execution
3.1 Installation
A. Pavement Restoration and Maintenance 02575-1
B. Adjustment of Castings 02575-2
C. Curb and/or Gutters 02575-2
D. Paving
1. Full Width Pavement Replacement 02575-2
2. Permanent Pavement Trench Repair Replacement 02575-2

Section 02730 Sanitary Sewerage System

Part 1 General
1.1 Summary 02730-1
1.2 Related Sections 02730-1

1.3 Reference Standards
A. American Water Works Association (AWWA) 02730-1
B. American National Standards Institute (ANSI) 02730-1
C. American Society of Testing Materials (ASTM) 02730-1
1.4 Submittals
A. Test Requirements 02730-2
1. Concrete Sanitary Sewer Pipe 02730-2
2. Concrete Sewer Pipe Joints 02730-2

3. Ductile Cast Iron Gravity and Pressure Sanitary Sewer Pipe and Fittings 02730-3
4. Polyvinyl Chloride (PVC) Pressure Sanitary Sewer Pipe and Fittings 02730-3
5. Polyvinyl Chloride (PVC) Sewer Pipe 8", 10" and 12" 02730-3
6. Concrete 02730-3
7. Miscellaneous Materials 02730-4

1.5 Product Delivery, Storage and Handling 02730-4

Part 2 Products
2.1 General 02730-4

2.2 Materials
A. Concrete, and/or Polyvinyl Chloride Sanitary Sewers
1. Concrete, and/or PVC Sewer Pipe 02730-4
2. Joint Material for Concrete, and/or PVC Sewer Pipe 02730-5
B. Ductile Iron Gravity and/or Pressure Line Sewers
1. Ductile Iron Sewer Pipe 02730-5
2. Joint Material for Ductile Iron Gravity and/or Pressure Line Sewers 02730-6
3. Air Relief Valve 02730-6
C. Polyvinyl Chloride (PVC) Pressure Sanitary Sewer Pipe 02730-6
D. Six-Inch (6") Tee Connections for House Services 02730-7
E. Six-Inch (6") House Services 02730-7
F. Service Reconnections 02730-7
G. Polyvinyl Chloride Sewer Cleanout Assemblies 02730-7
H. Manholes and Appurtenances
1. Standard Manhole Sidewall 02730-7
2. Concrete Manhole Bases and Fillets 02730-8
a. Precast Manhole Bases and Fillets 02730-8
b. Poured-in-Place Manhole Bases and Fillets 02730-8
3. Manhole Frames and Covers 02730-8
4. Manhole Drop Pipe Assembly 02730-9
5. Pipe Resilient Connectors to Manholes 02730-9
6. Sealant and Coatings 02730-9
7. Stubouts 02730-9
8. Manhole Steps 02730-9
9. Vent Pipe Assemblies 02730-9
10. Concrete Encasement and/or Cradle 02730-10
I. Pump Stations
1. Radio Telemetry 02730-10
2. Telemetry Equipment 02730-10
3. Repeater Station 02730-10
4. Approval by City Engineer 02730-11
5. Emergency Provisions 02730-11
6. Twelve Month Warranty 02730-11
7. Backup Emergency Power 02730-11

Part 3 Execution

3.1 Installation
A. Concrete, and/or Polyvinyl Chloride (PVC) Sanitary Sewers
1. General 02730-11
2. Pipe Laying 02730-13
B. Ductile Iron Gravity and/or Pressure Line Sewers 02730-13
C. Six-Inch (6") Tee Connections for House Services 02370-14
D. Six-Inch (6") House Sewer Services 02730-14
E. Cleanout Assembly 02730-15
F. Service Connections 02730-15
G. Manholes and Appurtenances 02730-16
1. Manhole Bases and Fillets 02730-16
2. Manhole Sidewall 02730-17
3. Precast Manhole Flat Top 02730-18
4. Manhole Frames and Covers 02730-18
5. Manhole Drop Pipe Assembly 02730-19
6. Shallow Manholes 02730-19
7. Pipe Resilient Connectors to Manholes 02730-19
8. Sealing 02730-20
9. Stubouts 02730-20
10. Manhole Steps 02730-20
11. Vent Pipe Assemblies 02730-20
H. Concrete Encasement and/or Cradle 02730-21

3.2 Testing
A. General 02730-21
B. Testing of Gravity Sewers
1. Visual Tests 02730-22
2. Low Pressure Air Tests 02730-22
a. Positive Pressure Test 02730-22
b. Negative Pressure Test 02730-22
3. Infiltration Tests 02730-23
4. Internal TV Inspection and/or Smoke Testing 02730-24
5. Deflection Tests 02730-24
C. Testing of Ductile Iron Gravity and/or Pressure Line Sewers
1. Ductile Gravity Sewers 02730-25
2. Ductile or Polyvinyl Chloride 02730-25
D. Testing of Six-Inch (6") House Sewer Services 02730-25
E. Manhole Vacuum Test 02730-25

3.3 Maintenance 02730-26

Section 02935 Topsoil and Seeding
Part 1 General
1.1 Summary 02935-1
1.2 Related Sections 02935-1
1.3 Unit Prices 02935-1

Part 2 Products

2.1 Materials 02935-1
A. Topsoil 02935-1
B. Seed 02935-1
C. Straw 02935-1
D. Sod 02935-1
E. Fertilizer 02935-1

Part 3 Execution
3.1 Installation 02935-2
A. Topsoil and Seeding 02935-2
B. Topsoil and Sodding 02935-2
3.2 Maintenance 02935-3

Section 03300 Concrete

Part 1 General
1.1 Summary 03300-1
1.2 General Requirements 03300-1
1.3 Submittals 03300-1

Part 2 Products
2.1 Concrete 03300-2
2.2 Proportions for Concrete 03300-2
2.3 Water Content 03300-3
2.4 Reinforcing Steel 03300-3

Part 3 Execution
3.1 Placing Concrete 03300-3
3.2 Soil and Water Conditions 03300-4
3.3 Storage of Materials 03300-4
3.4 Work in Cold and Hot Weather 03300-5
3.5 Inspection 03300-5
3.6 Placing Reinforcement 03300-5
3.7 Construction Joints 03300-6

Standard Sewer Line Details
Collar Detail
Standard Concrete Cap
Standard Concrete Encasement
Standard Drop Structure
4" To 24" Drop Structure Invert Detail
Full Width Pavement Replacement
Typical Trench
Trench Repair Pavement Replacement
Standard Precast Manhole (A-A)
Standard Shallow Manhole (A-A)
Elevation Section “B-B”
Detail of Mastic Gasket for Precast Manhole Sections
Manhole Frames and Covers
Rip-Rap Detail
Service Line Trenching Details

Cleanout
Typical Service Line Detail
Service Line for Deep Trenches
6” Cleanout Frame & Cover-Traffic Bearing
6” Cleanout Frame & Cover-Easement
Vent Pipe Assembly

SECTION 01090

REFERENCE STANDARDS

PART 1 GENERAL

1.1 REQUIREMENTS INCLUDED

A. Abbreviations and acronyms used in contract documents to identify reference standards.

1.2 QUALITY ASSURANCE

A. Application: When a standard is specified by reference, comply with requirements and recommendations stated in that standard except when requirements are modified by the contract documents, or applicable codes establish stricter standards.

B. Publication Date: The publication in effect on the date of issue of contract documents, except when a specific publication date is specified.

1.3 ABBREVIATIONS, NAMES AND ADDRESSES OF ORGANIZATIONS

A. Obtain copies of referenced standards direct from publication source, when needed for proper performance of work, or when required for submittal by contract documents.

AASHTO American Association of State Highway and Transportation Officials
44 North Capital Street, NW
Washington, DC 20001

ANSI American National Standards Institute
(Former American Standards Association-ASA)
1430 Broadway
New York, New York 10018

AREA American Railroad Engineering Association
2000 "L" Street, NW
Washington, DC 20036

ASCE American Society of Civil Engineers
345 East 47th Street
New York, New York 10017

ASTM	American Society for Testing and Materials 1916 Race Street Philadelphia, PA. 19103
AWWA	American Water Works Association 6666 W. Quincy Avenue Denver, Colorado 80235
FHWA	Federal Highway Administration Federal Building, U.S. Courthouse Nashville, Tennessee 37202
FSS	Federal Specifications and Standards General Services Administration Specifications and Consumer Information Distribution Section (WFSIS) Washington, DC 20407
TDOT	Tennessee Department of Transportation James K. Polk Building 505 Deaderick Street Nashville, Tennessee 37219

B. Whenever abbreviations are used in this Contract Document, such abbreviations shall have the following meanings:

CY	Cubic Yard
FT	Feet
MFBM	One Thousand Feet Board Measure
LBS	Pounds
M	One Thousand
PVC	Polyvinyl Chloride
MJ	Mechanical Joint
B & S	Bell and Spigot T & G Tongue and Groove
ES	Extra Strength
SS	Standard Strength
VC	Vitrified Clay
RC	Reinforced Concrete
MH	Manhole
ASA	American Standards Association, Inc.
PCA	Portland Cement Association

END OF SECTION

SECTION 01410

TESTING LABORATORY SERVICES

PART 1 GENERAL

1.1 REQUIREMENTS INCLUDED

A. Contractor will employ and pay for the services of an independent testing laboratory to perform specified testing.

B. All tests shall be made in accordance with specified procedures; or, if not herein specified, they shall be made in accordance with applicable recognized standard practice. Reports of tests provided by the Contractor shall be promptly submitted to the Engineer; or, if provided by the Engineer, copies shall be promptly submitted to the Contractor.

1.2 RELATED SECTIONS

A. Conditions of the Contract: Inspections and testing required by laws, ordinances, rules, regulations, orders or approvals of public authorities.

B. Testing laboratory inspection, sampling and testing is required for:

1. Section 02223 Backfilling
2. Section 03300 Concrete

1.3 LABORATORY DUTIES

A. Cooperate with Engineer and Contractor; provide qualified personnel after due notice.

B. Perform specified inspections, sampling and testing of materials and methods of construction:

1. Comply with specified standards.

2. Ascertain compliance of materials with requirements of contract documents.

C. Promptly notify Engineer and Contractor of observed irregularities or deficiencies of work or products.

D. Promptly submit written report of each test and inspection; one (1) copy each to Engineer, Contractor and one (1) copy to record documents file. Each report shall include:

1. Date issued.
2. Project title and number.

3. Testing, laboratory name, address and telephone number.
4. Name and signature of laboratory inspector.
5. Date and time of sampling or inspection.
6. Record of temperature and weather conditions.
7. Date of test.
8. Identification of product and specification section.
9. Location of sample or test in the project.
10. Type of inspection or test.
11. Results of tests and compliance with contract documents.
12. Interpretation of test results, when requested by Engineer.

E. Perform additional tests as required by Engineer.

1.4 LIMITATIONS OF AUTHORITY OF TESTING LABORATORY

A. Laboratory is not authorized to:

1. Release, revoke, alter or enlarge on requirements of contract documents.
2. Approve or accept any portion of the work.
3. Perform any duties of the Contractor.

1.5 CONTRACTOR'S RESPONSIBILITIES

A. The Contractor shall give the Engineer sufficient notice of the time and place of any test to be made at the point of manufacture, assembly, or fabrication in order that the Engineer may witness the test if he so desires.

B. Cooperate with laboratory personnel, and provide access to work to manufacturer's operation.

C. Secure and deliver to the laboratory, adequate quantities and representational samples of materials proposed to be used and which require testing.

D. Provide to the laboratory the preliminary design mix proposed to be used for concrete and other materials mixes which require control by the testing laboratory.

E. Furnish copies of products test reports as required.

F. Furnish incidental labor and facilities:

1. To provide access to work to be tested.
2. To obtain and handle samples at the project site or at the source of the product to be tested.
3. To facilitate inspection and tests.
4. For storage and curing of test samples.

G. Notify laboratory sufficiently in advance of operations to allow for laboratory assignment of personnel and scheduling of tests.

1. When tests or inspections cannot be performed after such notice, reimburse Owner for laboratory personnel and travel expenses incurred due to Contractor's negligence.

H. Employ and pay for the services of a separate, equally qualified independent testing laboratory to perform additional inspections, sampling and testing required.

1. For the Contractor's convenience.
2. When initial tests indicate work does not comply with contract documents.

PART 2 PRODUCTS
(Not Used)

PART 3 EXECUTION

3.1 MATERIAL TESTS

A. All materials incorporated in this Contract shall be subject to inspection and test as follows: All tests, except as noted shall be made by an independent established Testing Laboratory, employed and paid for by the Contractor. The Laboratory selected shall be approved by the Engineer before definitely retained by the Contractor. Samples at the mill or factory shall be taken by a representative of the Testing Laboratory. Samples of construction materials from the site of the work, such as sand, gravel, concrete cylinders, etc., for which laboratory tests are required, shall be taken, assembled or prepared on the site of the work by representatives of the Testing Laboratory or by a competent employee of the Contractor subject to the approval of the Engineer. Any necessary containers, shipping boxes or crates shall be supplied by the Testing Laboratory or the Contractor. The Testing Laboratory or the Contractor shall pay all costs of transporting samples to the Laboratory. The Contractor shall furnish, without additional charges, all material that may reasonably be required for testing purposes.

B. Payment for tests shall be made by the Contractor. The tests to be made, the number of samples, and acceptance and rejection shall be based on the latest revised issue of standards and tentative standards of the American Society for Testing Materials unless otherwise noted in the Contract Specifications. Two signed copies of test reports on Testing Laboratory forms or letterhead shall be delivered to the Engineer prior to incorporation of the material into the work.

C. All tests shall be made in accordance with procedures specified in the Contract Specifications; or, if not herein specified, they shall be made in accordance with applicable recognized standard practice. Reports of tests provided by the Contractor shall be promptly submitted to the Engineer; or, if provided by the Engineer, copies shall be promptly submitted to the Contractor.

END OF SECTION

SECTION 01560

TEMPORARY CONTROLS

PART 1 GENERAL

1.1 REQUIREMENTS INCLUDED

A. Furnish, install and maintain suitable barriers as required to prevent pubic entry, and to protect the work, existing facilities, trees and plants from construction operations; remove when no longer needed, or at completion of work.

B. Provide and maintain methods, equipment and temporary construction and signs, as necessary to provide controls over environmental conditions at the construction site and related areas under Contractor's control; remove physical evidence of temporary facilities at completion of work.

C. Maintain a suitable office in the vicinity of the area.

1.2 RELATED SECTIONS

A. Section 01700 Contract Closeout Procedures

B. Section 01710 Cleanup and Restoration

C. Section 02722 Excavation

1.3 UNIT PRICES

A. Dust Control

1. No separate measurement and payment will be made for this work.

1.4 DUST CONTROL

A. Provide positive methods and apply dust control materials to minimize raising dust from construction operation, and provide positive means to prevent air-borne dust from dispersing into the atmosphere.

1.5 WATER CONTROL

A. Provide methods to control surface water to prevent damage to the project, the site, or adjoining properties.

1. Control fill, grading and ditching to direct surface drainage away from excavations, pits, tunnels and other construction areas; and to direct drainage to proper runoff.

B. Provide, operate and maintain hydraulic equipment of adequate capacity to control surface water.

C. Dispose of drainage water in a manner to prevent flooding, erosion, or other damage to any portion of the site or to adjoining areas.

1.6 DEBRIS CONTROL

A. Maintain all areas under Contractor's control free of extraneous debris.

B. Initiate and maintain a specific program to prevent accumulation of debris at construction site, storage and parking areas, or along access roads and haul routes.

1. Provide containers for deposit of debris as specified in Section 01710-Cleanup and Restoration.
2. Prohibit overloading of trucks to prevent spillages on access and haul routes.

a. Provide periodic inspection of traffic areas to enforce requirements.

C. Schedule periodic collection and disposal of debris as specified in section 01710-Cleanup and Restoration.

1. Provide additional collections and disposals of debris whenever the periodic schedule is inadequate to prevent accumulations.

1.7 POLLUTION CONTROL

A. Provide methods, means and facilities required to prevent contamination of soil, water or atmosphere by discharge of noxious substances from construction operations.

B. Provide equipment and personnel, perform emergency measures required to contain any spillages, and to remove contaminated soils or liquids.

1. Excavate and dispose of any contaminated earth off-site, and replace with suitable compacted fill and topsoil.

C. Take special measures to prevent harmful substances from entering public water.

1. Prevent disposal of wastes, effluents, chemicals, or other such substances adjacent to streams, or in sanitary or storm sewers.

D. Provide systems for control of atmospheric pollutants.
1. Prevent toxic concentrations of chemicals.
2. Prevent harmful dispersal of pollutants into the atmosphere.

1.8 EROSION CONTROL

A. Plan and execute construction and earthwork by methods to control surface drainage from cuts and fills, and from borrow and waste disposal areas, to prevent erosion and sedimentation.

   1. Hold the areas of bare soil exposed at one time to a minimum.
   2. Provide temporary control measures such as berms, dikes, and drains.

B. Construct fills and waste areas by selective placement to eliminate surface silts or clays which will erode.

C. Periodically inspect earthwork to detect any evidence of the start of erosion, apply corrective measures as required to control erosion.

1.9 DISPOSAL OF SPOIL MATERIAL

During the execution of this work spoil material will have to be disposed of by the Contractor. The Contractor is required to:

1. Reveal the location of the site of disposal.

2. Obtain all necessary approvals and permits to dispose of the waste at the proposed site.

1.10 OFFICE OF CONTRACTOR

A. If, in the opinion of the Owner, the Contractor's regularly established business office is so removed from the area so as to interfere with the transactions between the Owner and the Contractor, the Contractor shall provide and maintain an office within Davidson or Sumner County at a location to be approved by the Owner.

B. The above office shall be the headquarters of a foreman or superintendent authorized to receive drawings, instructions, or other communications, articles or things from the Owner or its agents, and any such thing given to the said foreman or superintendent or delivered to the Contractor's office at the site of the work in his absence shall be deemed to have been given to the Contractor.

1.11 WORK IN STREETS AND ALLEYS

A. Throughout the performance of the work or in connection with this Contract, the Contractor shall construct and adequately maintain suitable and safe crossing over the trenches and such detours as are necessary to care for public and private traffic. The material excavated from the trenches shall be compactly deposited along the sides of the trench or elsewhere in such a manner as shall give as little inconvenience as possible to the traveling public, to adjoining property owners, to other contractors or to the Owner.

1.12 WORK IN VICINITY OF EXISTING SEWERS

A. Where the work on this project is in the vicinity of existing Public or Private Sewers, the Contractor shall schedule his operations in such a manner that all existing sewer service may be adequately maintained.

B. Where existing sewers are to be removed from service permanently or temporarily, the Contractor shall bypass, in as manner acceptable to the Engineer, all sewage and drainage which may be received by those sewers until the existing sewers are returned to service or replaced.

C. The Contractor shall not use any existing sanitary sewer to divert or dispose of storm or surface water. After a connection has been made to any existing sanitary sewers, the Contractor shall plug the nearest opening to said connection and make such provisions that are necessary for pumping, bypassing and conducting storm or surface water, to insure the above until the acceptance of the project.

1.13 TRAFFIC CONTROL

The contractor shall obtain approval of and coordinate all traffic control measures with the Department of Public Works. Traffic control shall conform to Part VI of the Manual on Uniform Traffic Control Devices (MUTCD), latest edition.

PART 2 PRODUCTS

2.1 MATERIALS, GENERAL

A. Materials may be new or used, suitable for the intended purpose, but must not violate requirements of applicable codes and standards.

2.2 BARRIERS

A. Materials to Contractor's option, as appropriate to serve required purpose.

PART 3 EXECUTION

3.1 GENERAL - BARRIERS AND SIGNS.

A. Install facilities of a neat and reasonable uniform appearance, structurally adequate for required purposes.

B. Maintain barriers and signs during entire construction period.

C. Relocate barriers as required by progress of construction.

3.2 REMOVAL - BARRIERS AND SIGNS

A. Completely remove barricades and signs, including foundations, when construction has progressed to the point that they are no longer needed and when approved by

the Engineer.

B. Clean and repair damage caused by installation, fill and grade areas of the site to required elevations and slopes, and clean the area.

3.3 DUST CONTROL

A. All available precautions shall be taken to control dust. When the Engineer judges dust to be a problem, the Contractor shall control the dust by sprinkling, by applying calcium chloride, or by other methods as directed.

B. If track drills are used for drilling rock, water must be provided with the drill to eliminate dust.

END OF SECTION

SECTION 01710

CLEANUP AND RESTORATION

PART 1 GENERAL

1.1 SUMMARY

A. This item shall include the cleanup and restoration of areas and facilities disturbed by construction operations including removal and disposal of waste material and trash; replacement of all bituminous and/or concrete driveways, parking areas, sidewalks and/or ramps disturbed during construction operations; and the separation and redepositing of topsoil, final grading, raking, fertilizing, seeding and strawing of trenches and areas disturbed by construction operations across public and/or private property.

B. This item shall not include the temporary surfacing or permanent pavement replacement of any public street or roadway disturbed during construction operations, these items of work being covered elsewhere in these Specifications.

1.2 RELATED SECTIONS

A. Section 02222: Excavation

B. Section 02223: Backfilling

C. Section 02730: Sanitary Sewerage System

D. Section 02935: Topsoil and Seeding

PART 2 PRODUCTS

(Not Used)

PART 3 EXECUTION

3.1 CLEANUP AND RESTORATION

A. The Contractor shall not allow the site of the work to become littered with trash and waste material, but shall maintain the same in a neat and orderly condition throughout the construction period. The Engineer shall determine what is or is not waste material and the time, place and manner of disposal of the same. The Contractor shall reveal the location of disposal and obtain all approvals and permits as directed in Section 01560 - Temporary Controls.

B. The Contractor's method for disposal of trash and waste shall not cause damage or create a nuisance to other public or private property.

C. The Contractor shall keep the construction site clean and remove surplus and

discarded materials, temporary structures, stumps and portions of trees and debris of any kind. He shall leave the site of work in a neat and orderly condition, similar or equal to that prior to construction.

D. The Contractor shall return all reusable items salvaged from abandoned or replaced facilities. Items may include manhole, valve box, and meter box, frames and covers, piping and fittings or other reusable equipments.

E. Cleanup and restoration operation shall be concurrent with the construction operation and shall be completed before final acceptance by the owner. The Contractor shall replace with like and kind any trees, shrubbery, fences, culverts, bridges, houses or buildings and all water, sewer, gas telephone and electrical lines thereto, and all other private and public property along or adjacent to the work.

F. Where directed by the Engineer, the Contractor shall topsoil, rake, fertilize, seed and straw all lawns and grass areas disturbed by construction operations. Said operations shall be specified and additional payment will be made only as specified in Section 02935, "Topsoil and Seeding", paragraph 3-A of these specifications.

G. All private and public property along or adjacent to the work disturbed by construction operations shall be restored to a condition similar or equal to that existing prior to construction. All private property restoration shall be made within two (2) weeks of excavation.

H. Before final acceptance by the Owner, the Contractor shall replace and/or restore any water, sewer, drain, and gas lines and appurtenances, electrical, telephone, telegraph conduits and wires, both underground and above ground, and appurtenances; traffic signals, fire and police alarm systems and appurtenances; sidewalks, curbs gutter, drainage ditches and pavements and all other public utility facilities and appurtenances along or adjacent to the work that may have been disturbed by construction operations.

I. All public utility facilities and appurtenances along or adjacent to the work disturbed by construction operations shall be restored to a condition similar or equal to that existing prior to construction.

J. Temporary pavement of public streets and roads shall be installed, and additional payment shall be made as specified in Section 2575 "Pavement Replacement and Repairs", paragraph 1.3-A. of these specifications.

K. Permanent pavement replacement of public streets and roads shall be installed and additional payment shall be made as specified in "Pavement Contract Specifications" of the Contract.

L. Gravel, bituminous and/or concrete driveway and/or parking areas and concrete sidewalk and/or ramp replacement shall be installed; and additional payment shall be made as specified in Section 02575 "Pavement Replacement and

Repair", paragraph 1.3-N of these specifications.

M. Contractor's attention is called to the fact that no additional payment will be allowed under this Contract for maintaining the gravel shoulder with crusher stone once the trench has been completely gravel refilled and prior to the shoulder being shot and chipped. Also, no additional payments will be allowed for that portion of the shoulder beyond the trench limits disturbed by construction.

N. Restoration of areas and facilities disturbed by construction operations shall be properly and regularly maintained in a condition similar or equal to that prior to construction during a period of one (1) year after the final acceptance of the work by the Owner. Any repairs required because of unsatisfactory backfill or defective materials, and workmanship shall be at the expense of the Contractor. Maintenance measures made necessary by ordinary wear and tear shall not be at the expense of the Contractor.

O. Cleanup and restoration of areas and facilities disturbed by construction operations shall be considered an integral part of the excavation work and no separate payment will be allowed therefore except as herein specified.

END OF SECTION

SECTION 01720

PROJECT RECORD DOCUMENTS

PART 1 GENERAL

1.1 REQUIREMENTS INCLUDED

A. Maintain at the site for the owner, one (1) record copy of:

1. Drawings
2. Specifications
3. Addenda
4. Change Orders and other modifications to the contract
5. Engineer field orders or written instructions
6. Approved shop drawings, product data and samples
7. Field test records.

1.2 RELATED SECTIONS

A. Section 01340: Shop Drawings, Product Data and Samples

1.3 MAINTENANCE OF DOCUMENTS AND SAMPLES

A. Store documents and samples in Contractor's field office, apart from documents used for construction.

1. Provide files and racks for storage of documents.

B. Maintain documents in a clean, dry, legible condition, and in good order. Do not use record documents for construction purposes.

C. Make documents and samples available at all times for inspection by Engineer.

1.4 SUBMITTAL

A. At contract closeout, deliver two (2) Paper and one (1) Digital record document to the City as Certified by a Professional Engineer.

1. Digital plans are to be in the following format(s) only: Autodesk *.dwg, or Microstation *.dgn. Digital map data must be projected in NAD 1983 State Plane Tennessee FIPS 4100 Feet.

B. Accompany submittal with transmittal letter in duplicate containing:

1. Date
2. Project title and number
3. Contractor's name and address
4. Title and number of each record document

5. Signature of Contractor or his authorized representative

PART 2 PRODUCTS

(Not used)

PART 3 EXECUTION

(Not used)

END OF SECTION

SECTION 02222

EXCAVATION

PART 1 GENERAL

1.1 SUMMARY

The work to be performed under this section shall include the preparation of the site of work; the loosening, loading, removing and disposing of all materials, wet or dry, which are necessary to be removed to construct all sanitary sewers and appurtenances included under this Contract; furnishing, placing and maintaining all sheeting, shoring, bracing and timbering necessary for the proper protection and safety of the work, the workmen, the public and adjacent property and improvements; the dewatering of the excavation; and all other work necessary and incidental to perform the excavation required to construct the sanitary sewers and appurtenances under this Contract. All Contractors shall have Confined Space Entry policies and procedures per OSHA requirements.

Excavation will be unclassified and the cost shall be merged into the unit prices bid for other items of work under this Contract. No distinction shall be made between rock and dirt excavation, and no separate payment will be allowed therefore.

1.2 RELATED SECTION

A. Section 02223: Backfilling

B. Section 02730: Sanitary Sewerage System

C. Section 03300: Concrete

PART 2 PRODUCTS

(Not Used)

PART 3 EXECUTION

3.1 PREPARATION OF THE SITE

The Contractor shall notify any private property owner, company, or individual and/or proper utility facility owner or supervising official not less than twenty-four (24) hours in advance of any work which might damage or interfere with the operation or use of their property and/or public utility facilities.

Where the area to be excavated is occupied by trees, brush or other vegetable growth, such growth shall be cleared from the area and disposed of in a satisfactory manner except trees, cultivated shrubs, flowers, etc., situated within public right-of-way and /or easements through private property, but not located directly within excavation limits, shall remain undisturbed. Small trees, cultivated shrubs, flowers, etc., located directly

within excavation limits shall be transplanted so they may be replaced during property restoration operations. No tree larger than six (6) inches in diameter shall be removed or disturbed without the permission of the Engineer. The Contractor shall exercise special precautions for the protection and preservation of such objects throughout all stages of construction and will be held liable for any damage which may result to said objects from excavation or construction operations.

The Contractor shall remove from the site of work debris, objectionable matter and such small buildings and structures as are specifically noted on the Contract Drawings to be removed. All other structures or objects such as buildings, walks, curb, walls, fences, etc., located within excavation limits shall be removed in such a manner that they may be replaced during property restoration operations. All such objects not located within excavation limits shall not be disturbed or removed without the permission of the Engineer, and the Contractor shall exercise special precautions for the protection and preservation of such objects throughout all stages of construction and will be held liable for any damage which may result to objects from excavation or construction operations.

Where excavation is to be done in paved areas, the pavement shall be neatly cut or sawed to the required width; the Contractor shall exercise special precautions that all pavements located outside the limits of excavation are not disturbed or damaged and will be held liable for any damage which may result to said pavements from excavation or construction operations.

Prior to excavation operations, the Contractor shall accurately locate all public utility facilities and all private water and sewer service lines, septic tanks and drainfields or connections thereto that may be affected by the proposed construction. During excavation operation, the Contractor shall take special precautions that all such facilities and appurtenances thereto are not damaged or disturbed and will be held liable for any damage which may result to said facilities from excavation or construction operations.

Preparation of the site shall be considered an integral part of the excavation work, and no separate payment will be allowed therefore.

3.2 EXCAVATION

The ground shall be excavated in open trenches, of sufficient width and depth to provide ample room within the limits of excavation or the line of sheeting and bracing, for the proper construction of sanitary sewers and their appurtenances as shown on the Contract Drawings and for removing any material which the Engineer may deem unsuitable for foundation.

In trench excavations where the force main or sanitary sewer pipes are laid, the width of the trench at the top of the pipe shall not exceed four-thirds (4/3) of the internal diameter of the sewer plus eight (8) inches, provided a greater width may be permitted by the Engineer where it is necessary to sheet or brace the trench. There shall be a minimum of four (4) inches clear space on each side of the pipe to permit placing of backfill around the pipe.

In dirt excavation, the bottom of the trench shall be excavated to a minimum depth of

four (4) inches below the bottom of the pipe, and in rock excavation the bottom of the trench shall be excavated to a minimum depth of six (6) inches below the bottom of the pipe and these spaces refilled with crushed stone as specified hereinafter. Dirt shall be interpreted to mean all soils other than rock, sand, or gravel. Any excavation carried below these depths shall also be refilled with crushed stone, and refill with tamped dirt or large rocks will not be allowed. Prior to placing the required refill, loose dirt or rocks shall be removed from the bottom of the trench.

No refill shall be placed until the Engineer has determined that the foundation is sufficient to support the proposed construction. Any additional excavation necessary to obtain a satisfactory foundation shall be specified hereinafter.

In areas not subject to vehicular traffic excavation of the trench shall not advance more than two hundred (200) feet ahead of pipe laying, or further than, in the opinion of the Engineer, the Contractor can lay pipe by the end of the day's work.

Excavation, backfilling, cleanup and temporary pavement on any individual road or street in which sewers are installed shall be prosecuted concurrently with the sewer installation to the point that satisfactory ingress and egress to public streets and private property can be maintained.

Excavation and waste material stored about the work shall be so placed and work so conducted as to cause no obstruction to the traveling public. No waste material shall be placed on public paved areas.

At any time when, in the judgment of the Engineer, the Contractor has obstructed or closed or is carrying on operations on a greater portion of the streets, or public ways than is necessary for the proper execution of the work, the Engineer may require the Contractor to finish the sections on which work is in progress before work is started on any additional section.

The Contractor shall make provisions by bridges or otherwise, at cross streets, highways, sidewalks, and private driveways for free passage of vehicles and pedestrians. Where bridging is impractical or unnecessary, the Contractor may make arrangements satisfactory to the Engineer for the diversion of traffic.

The Contractor shall secure the approval and obtain operation procedures from the City of Goodlettsville before closing or starting construction operations within the right-of-way of any street or alley.

Excavation for manholes and other structures shall not exceed that required to allow clear space between the outer surface of the structure and the banks of the excavations or the sheeting used to protect the excavation, as required for obtaining the required compaction of the backfill material. The bottom of the excavation shall be true to shape and elevation as shown on the Contract Drawings. Any excavation carried below the required elevation shall be refilled with crushed stone (#67 or 57) or the concrete specified for use in the base of the structure at the Contractor's expense.

Should rock be encountered in the excavation, it shall be removed by blasting or other methods. Where blasts are made, the excavation shall be covered with sufficient excavation and/or timber or steel matting to prevent danger to life or property. The Contractor shall secure all permits required by law for blasting operation and additional hazard insurance required at his own expense and shall observe all applicable laws and ordinances pertaining to blasting operations.

If track drills are used for drilling rock, water must be provided with the drill to eliminate dust.

No claim for an additional compensation beyond the Contract price of the work will be allowed on account of the character of the ground in which the trenches or other excavation is made.

The Contractor shall assume the risk of meeting and the Contract unit price shall include the cost of removal of quicksand, hardpan, clay, rock, boulders, rubbish, unforeseen obstacles, underground conduits, gas pipes, water pipes, drain tile, trees, roots, timber or masonry structures, railroad tracks, pavements, and sidewalk and the delay and/or damage occasioned by the same, whether or not shown on the Contract Drawings.

The location of existing piping and underground utilities such as sewer and gas lines, electrical and telephone conduits, etc., as shown on the Contract Drawings, have been determined from the best available information by actual surveys, or furnished and taken from the records and drawings of the existing utilities. However, the Owner does not assume responsibility for the possibility that, during construction, utilities other than those shown may be encountered, or that actual location of those shown may be different from the locations designated on the Contract Drawings.

At locations where it is necessary that locations be known of underground facilities, the Contractor shall, at his own expense, furnish all labor and tools to either verify and substantiate or definitely establish the position of the facilities.

Sufficient barriers, lights and flares shall be provided and maintained at all trenches and excavations to insure the safety of the workmen and public.

In all excavation, except in paved areas, where rock is encountered, the excavated dirt and rock materials shall be separated in such a manner that during backfilling operations the top one-foot (1') of trench backfill shall be dirt as specified hereinafter.

3.3 Sheeting, Shoring and Bracing

The Contractor shall furnish and install all temporary sheeting, shoring and bracing required to maintain the excavation in a safe working condition and to permit the safe and efficient installation of all items of Contract work. Sheeting, shoring and bracing shall be used in wet, saturated or flowing ground, ground subject to slides, cave-ins, settlement or movement and/or locations shown on the Contract Drawings.

Where excavations are made adjacent to existing buildings or other structures or in paved streets or alleys, the Contractor shall take particular care to sheet, shore and

brace the sides of the excavation adequately so as to prevent any undermining or settlement beneath such structures or pavement. Underpinning of adjacent structures shall be done when necessary and reviewed by the Engineer.

All sheeting, shoring and bracing shall have sufficient strength and rigidity to withstand the pressure exerted and to maintain the wall of the excavation in place.

Lumber used may be any species which will satisfactorily withstand driving. It shall be sawed with square corners, and shall be free from worm holes, loose knots, wind shakes, decay and unsound portion which might impair its strength or tightness. Minimum thickness shall be two-inch (2") nominal. Lumber shall be No. 2 common yard lumber in less than six-inch (6") sizes and common structural grade on timber six (6) inches and over. Steel sheet piling of an approved design and type may be used.

Sheeting, shoring and bracing shall not be left in place unless shown on the Contract Drawings or necessary for the safety and protection of new or existing work.

The sheeting, shoring and bracing shall be removed as the work progresses in such a manner as to prevent caving in of the sides of the excavation, or damage to the new or existing work. While sheeting, shoring and bracing are being removed, all voids left shall be filled and compacted. The Contractor may elect to use a portable steel box in lieu of the above, if approved by the Engineer.

All sheeting, shoring and bracing shall be considered an integral part of the excavation work, and no separate payment will be allowed therefore.

3.4 Dewatering Excavation

The Contractor shall do all ditching, pumping, well pointing and bailing, build all drains, and do all work necessary to keep the excavation clear of ground water, sewage or storm water during the process of the work and until the finished work is safe from injury.

No pipe shall be laid in water, and water shall not be allowed to run over masonry until concrete or mortar has set at least forty-eight (48) hours.

All water pumped or drained from the work shall be disposed of in a manner satisfactory to the Engineer without damage to adjacent property or to other work under construction. The Contractor shall not dispose of storm or surface water through new or existing sanitary sewerage facilities. After a connection has been made to any existing sanitary sewer, the Contractor shall plug the nearest opening to said connection and make provisions that are necessary for pumping, by-passing and conducting storm or surface water to insure the above.

Necessary precautions shall be taken to protect all construction against flooding and/or floatation from hydrostatic uplift.

The dewatering of the excavation shall be considered an integral part of the excavation work, and no separate payment will be allowed therefore.

3.5 Foundation Strengthening

After the excavation is opened and grade established, it will be examined by the Engineer who will determine whether or not it is satisfactory foundation for pipes and/or appurtenances, or if it is necessary to stabilize the base.

When ordered by the Engineer or designated on the Contract Drawings, the base shall be stabilized by installing concrete cradle or encasement, or by removing unsatisfactory material and refilling with gravel as directed by the Engineer during construction.

Concrete cradle or encasement shall be installed and additional payment shall be made as specified in Section 02730, "Sanitary Sewerage System", paragraph 1.3-F of these Specifications.

Gravel refill, from a plane six (6) inches below the bottom of the pipe, shall be installed; and additional payment shall be made as specified in Section 02730, "Sanitary Sewerage System", paragraph 1.3-H, of these Specifications.

3.6 Use of Explosives

Should the Contractor elect to use explosives in the prosecution of the work, the Contractor shall employ only workmen familiar and skilled in the use of explosives, carefully cover the explosion with suitable timber, matting and/or excavation, and exercise the utmost care so as not to endanger life or property.

The Contractor shall obtain all necessary permits and/or licenses and carry on such work in compliance with all the Government ordinances and the State of Tennessee laws.

Whenever explosives are stored or kept, they shall be stored in a safe and secure manner, and all storage places shall be plainly marked **"DANGEROUS - EXPLOSIVES."**

END OF SECTION

SECTION 02223

BACKFILLING

PART 1 GENERAL

1.1 SUMMARY

The work to be performed under this section shall include the placement and compaction of all materials which are necessary to provide pipe bedding, pipe envelope and backfill for all water mains, sanitary sewers and appurtenances and all other work necessary and incidental to perform the backfill required to construct the sanitary sewers and appurtenances under this Contract.

1.2 RELATED SECTIONS

A. Section 02222: Excavation

B. Section 02730: Sanitary Sewerage System

C. Section 03300: Concrete

1.3 REFERENCE STANDARDS

A. Tennessee Department of Transportation Standard

Specifications for Road and Bridge Construction (TDOT).

PART 2 PRODUCTS

2.1 MATERIALS

A. For Sanitary Sewers and Force Mains

1. Outside Roadway

a. Bedding - TDOT Section 903, Class "A", No. 67 aggregate

b. Refill and/or Backfill - TDOT Section 903, Class "A", No. 67 or No. 57 aggregate

2. Inside Roadway

a. Bedding - TDOT Section 903, Class “A”, No. 67 aggregate

b. Refill and/or Backfill - TDOT Section 903, Class "A", No. 67 or No. 57 aggregate

PART 3 EXECUTION

3.1 GENERAL

A. Outside Roadways
The Contractor's attention is called to the fact that, when laying force mains and sanitary sewers, the envelope shall be gravel.

B. Inside Roadways including shoulders and paved areas.
The Contractor's attention is called to the fact that the entire excavated trench for proposed force mains and sanitary sewers shall be completely bedded and backfilled with gravel.

3. Check Dams
Check dams shall be installed in the bedding and backfill of all new or replaced sewer lines to limit the drainage area subject to the french drain effect of gravel bedding. Dams shall consist of compacted clay bedding and backfill at least three (3) feet thick to the top of the trench and cut into the walls of the trench two (2) feet. Alternatively, concrete may be used, keyed into the trench walls. Dams shall be placed no more than 500 feet apart. The preferred location is upstream of each manhole. All stream crossings will include check dams on both sides of the crossing.

3.2 INSTALLATION

A. For Sanitary Sewers and Force Mains

1. Outside of Roadway

a. Bedding
All sewers outside roadway shall be bedded in a crushed stone bedding, not less than six (6) in thickness.

The crushed stone envelope around sewers outside roadway shall extend from six (6) inches below the pipe up to eight (8) inches over the top of the pipe and shall be not less than six (6) inches in thickness on the sides of the pipe. The envelope shall consist of clean crushed stone free from debris and other objectionable materials, placed in even layers simultaneously on each side of the pipe, and shall be thoroughly consolidated (tamped) to completely fill the haunches of the pipe. Consolidation by jetting will not be allowed.

The crushed stone material to be used for pipe bedding and envelope shall be equal to size 67 as given in the latest standard specifications for road and bridge construction, Section 903.

The sanitary sewer pipe shall be installed as specified elsewhere in these specifications. Care shall be taken to prevent the pipe from shifting from the specified line and grade.
No pipe shall be backfilled above the top of the pipe until the alignment and joints have been checked and inspected by the Engineer. As soon as the pipe is approved, the trench shall be backfilled to eight (8) inches above the top of the pipe.
The cost of furnishing and installing crushed stone bedding and envelope shall be merged into the unit price bid for that depth of sewers, and no separate payment will be made therefore.

b. Backfill

Backfill material from a height of eight (8) inches above the top of the pipe shall consist of excavated material and may have a broken stone content of approximately three-fourths (3/4) by volume. Sufficient earth material shall be incorporated into such backfill to completely fill all voids. Individual stones shall not exceed eight (8) inches in their maximum dimension. Such backfill material shall be placed and spread in even layers not exceeding twelve (12) inches in depth. The cost of this backfill for sewers outside of the roadway shall be merged into the unit bid price per lineal foot for that depth sewers. At all locations closely adjacent to pavements, driveways, parking areas, buildings, or other improvements subject to damage by displacement, backfill shall be tamped and thoroughly compacted in six-inch (6") layers (before compaction). Power operated tampers shall not be used for that portion of the backfill under a height of one (1) foot above the top of the pipe. In other areas backfill may be placed without tamping, but the backfill shall be compacted to a density equivalent to that which will result from spreading by a bulldozer thereon. The Contractor shall exercise precaution to prevent damage to the force main or sewer line from the operation of backfill equipment.

Earth material for backfill that, in the opinion of the Engineer is too dry to allow thorough compaction, shall receive an admix of sufficient water prior to compaction to serve the required compaction. Earth material considered by the Engineer to have excessive water content or otherwise unsuitable shall not be placed.

Under paved roads or shoulders within the street right-of-way, the trench shall be completely backfilled with gravel as specified in paragraph 3.22-B-2 of this Section of these Specifications.

When the material excavated from the trench, in the opinion of the Engineer,

is suitable for backfill, it shall be used.

The trench excavation, except in pavement areas, shall have the top one (1) foot backfilled with fine loose earth free from large clods, vegetable matter, debris, stones, or other objectionable materials; and the adjacent surface of the work shall be left in a neat and workmanship condition.

Where trenches have been cut across or along pavements, graveled roadway shoulders, sidewalks, driveways, parking areas or other areas subject to pedestrian or vehicular traffic, the top six-inch (6") and the adjacent area disturbed by construction operations shall be temporarily paved by placing and spreading gravel or crushed stone thereon.

Such temporary pavement shall be maintained by the Contractor until any required temporary pavement or permanent pavement and/or property restoration has been completed.

The temporary pavement and its base course and subgrade shall be inspected by the Department of Public Works for full compliance with the Department's requirements for permanent pavement at a later date.

Backfill around manholes and other structures shall be conducted in the same manner as specified herein before.

All backfilling shall be done in such a manner as will not disturb or injure the pipe or structure against which backfill is being placed. Any pipe or structure injured, damaged, or displaced by backfill operations shall be excavated and repaired by the Contractor at his expense as directed by the Engineer.

Any settlement of backfill below the original ground surface shall be remedied by the Contractor for a period of one year after final completion and acceptance by the Owner.

In areas not subject to vehicular traffic, backfill shall not be left unfinished more than three hundred feet (300') behind the pipe laying, or farther than, in the opinion of the Engineer, can be backfilled by the end of the day's work.

Excavation, backfill, cleanup and temporary pavement on any individual road or street in which sewers are installed shall be prosecuted concurrently with the sewer installation as specified hereinbefore under the applicable provisions for excavation.

Backfill shall be considered an integral part of the excavation work, and no

separate payment will be allowed therefore except as herein specified.

Gravel backfill in gravel parking areas and driveways shall be considered an integral part of the excavation work, and no separate payment will be allowed therefore.

2. Inside of Roadway

a. Bedding

All sewers under roadway shall be bedded in a crushed stone bedding not less than six (6) inches in thickness.

The crushed stone envelope around all sewers under roadway shall extend from six (6) inches below the pipe up to eight inches over the top of the pipe and shall be not less than six (6) inches in thickness on the sides of the pipe. The envelope shall consist of clean crushed stone free from debris and other objectionable materials, placed in even layers simultaneously on each side of the pipe, and shall be thoroughly consolidated to completely fill the haunches of the pipe.

Consolidation by jetting will <u>not</u> be allowed. The crushed stone material to be used for pipe bedding and envelope shall be equal to size 67 as given in the latest standard specifications for road and bridge construction, Section 903.

The sanitary sewer pipe shall be installed as specified elsewhere in these specifications. Care shall be taken to prevent the pipe from shifting from the specified line and grade.

No pipe shall be backfilled above the top of the pipe until the alignment and joints have been checked and inspected by the Engineer. As soon as the pipe is approved, the trench shall be backfilled to eight (8) inches above the top of the pipe.

The cost of furnishing and installing crushed stone bedding and envelope shall be merged into the unit price bid for the depth of sewers, and no separate payment will be made therefore.

b. Backfill

Trenches for sewers constructed under roadway and/or gravel driveways will be backfilled from a point 8 inches above the top of the pipe to the existing surface of the roadway with crushed stone (#57 or 67) or an approved off-site

non-compressible material with the last 12 inches and make-up backfill to be of pug mill mix variety with a moisture content of 3%.

The cost of furnishing and installing crushed stone backfill shall be merged into the unit price bid for sewers under roadway, and no separate payment will be made therefore.

Gravel backfill and/or gravel driveways shall be considered an integral part of the Contract, and no additional payment will be allowed therefore.

The Contractor's attention is called to the fact that no additional payment will be allowed under this Contract for maintaining the gravel sewer trenches with crusher run stone (pug-mill mix) once the trench has been completely gravel refilled and prior to the roadways being paved.

Pug-Mill Mix, where required, shall be installed in the top portion of the trench in roadway area, and gravel shall be No. 7 (1/2" and smaller) or No. 8 (3/8" and smaller) or other sizes approved by the Engineer.

All surplus excavated material which is not used in backfilling shall be removed from the job site and disposed of by the Contractor at his own expense in a manner satisfactory to the Engineer. The Contractor shall not use any vacant lot or private property as a spill site without the written authorization of the owner or his agent. A copy of said authorization shall be filed with the Engineer.

3. Gravel Refill

This item shall include furnishing, placing and installing gravel refill at the locations specified or as directed by the Engineer during construction. This shall also include the removing and disposing of all unsuitable material necessary to establish satisfactory foundations and install gravel refill.

Work to be performed shall include all work necessary for the furnishing and placing of gravel refill.

Gravel refill furnished shall be No. 67, 57 or other size approved by the Engineer. Both sewer lines and services shall be gravel backfilled under paved roadways and/or shoulders within street rights-of-ways as specified in paragraph 3.22-B-2 of this Section of these Specifications.

END OF SECTION

SECTION 02270

SLOPE PROTECTION AND EROSION CONTROL

PART 1 GENERAL

1.1 SUMMARY

A. This section shall consist of control measures as shown in the Plans or directed by the Engineer during the life of the Contract to control erosion and water pollution, through the use of berms, dikes, dams, sediment basins, fiber mats, netting, mulches, grasses, slope drains, temporary silt fences, and other control devices.

B. The temporary pollution control provisions contained herein shall be coordinated with the permanent erosion control features to assure economical, effective, and continuous erosion control throughout the construction of post-construction period.

C. Temporary pollution control shall include construction work outside the project area where such work is necessary as a result of construction such as borrow pit operations, haul roads and equipment storage sites.

1.2 SUBMITTALS

A. At the pre-construction conference, the Contractor shall submit for acceptance his schedule for accomplishment of temporary and permanent erosion control work, as are applicable for clearing and grubbing, grading, bridges and other structures at watercourses, construction, and paving. He shall also submit for acceptance his proposed method of erosion control on haul roads and borrow pits and his plan for disposal of waste materials. No work shall be started until the erosion control schedules and methods of operations have been accepted by the Engineer.

1.3 SEQUENCING AND SCHEDULING

A. Prior to the pre-construction conference, the Contractor shall meet with the Engineer to go over in detail the expected problem areas regarding the erosion control work. Different solutions should be discussed so that the best method might be determined. It is the basic responsibility of the Contractor to develop an erosion control plan acceptable to the Engineer.

PART 2 PRODUCTS

2.1 MATERIALS

A. Temporary Berms: A temporary berm is constructed of compacted soil, with or without a shallow ditch, at the top of fill slopes or transverse to centerline on fills. These berms are used temporarily at the top of newly constructed slopes to prevent excessive erosion until permanent controls are installed or slopes stabilized.

B. Temporary Slope Drains: A temporary slope drain is a facility consisting of stone gutters, fiber mats, plastic sheets, concrete or asphalt gutters, half round pipe, metal pipe, plastic pipe, sod or other material acceptable to the Engineer that may be used to carry water down slopes to reduce erosion.

C. Sediment Structures: Sediment basins, ponds, and traps, are prepared storage areas, constructed to trap and store sediment from erodible areas in order to protect properties and stream channels below the construction areas from excessive siltation.

D. Check Dams: Check dams are barriers composed of logs and poles, large stones or other materials placed across a natural or constructed drainway. Stone check dams shall not be utilized where the drainage area exceeds fifty (50) acres. Log and pole structures shall not be used where the drainage area exceeds five (5) acres.

E. Temporary Seeding and Mulching: Temporary seeding and mulching are measures consisting of seeding, mulching, fertilizing, and matting utilized to reduce erosion. All cut and fill slopes including waste sites and borrow pits shall be seeded when and where necessary to eliminate erosion.

F. Brush Barriers: Brush barriers shall consist of brush, tree trimmings, shrubs, plants, and other approved refuse from the clearing and grubbing operations. Brush barriers are placed on natural ground at the bottom of fill slopes, where the most likely erodible areas are located, to restrain sedimentation particles.

G. Baled Hay or Straw Checks: Baled hay or straw erosion checks are temporary measures to control erosion and prevent siltation. Bales shall be either hay or straw containing five (5) cubic feet or more of material. Baled hay or straw checks shall be used where the existing ground slopes toward or away from the embankment along the toe of slopes, in ditches, or other areas where siltation erosion or water runoff is a problem.

H. Temporary Silt Fences: Silt fences are temporary measures utilizing woven wire or other approved material attached to posts with filter cloth composed of burlap, plastic filter fabric, etc., attached to the upstream side of the fence to retain the suspended silt particles in the runoff water.

I. Rip-Rap Stone: Rip-rap stone shall be sound, dense and durable, free from excessive cracks, pyrite intrusions and other structural defects. Stones which will be used with mortar shall be free from dirt, oil, or other material that might prevent good adhesion with the mortar.

PART 3 EXECUTION

3.1 INSTALLATION

A. Construction Requirements: The Contractor shall be required to incorporate all permanent erosion control features into the project at the earliest practicable time as outlined in his accepted schedule. Temporary pollution control measures shall be

used to correct conditions that develop during construction that were not foreseen during the design stage; that are needed prior to the installation of permanent pollution control features; or that are needed temporarily to control erosion that develops during normal construction practices, but are not associated with permanent control features on the project.

Where erosion is likely to be a problem, clearing and grubbing operations should be so scheduled and performed that grading operations and permanent erosion control features can follow immediately thereafter if the project conditions permit; otherwise, erosion control measures may be required between successive construction stages. Under no conditions shall the surface area of erodible earth material exposed at one time by clearing and grubbing exceed 750,000 square feet without approval of the Engineer.

Under no conditions shall the amount of surface area or erodible earth material exposed at one time by excavation or fill within the project area exceed 750,000 square feet without prior approval by the Engineer.

The Engineer may increase or decrease the amount of surface area of erodible earth material to be exposed at one time by clearing and grubbing, excavation, borrow and fill operations as determined by his analysis of project conditions.

In the event of conflict between these requirements and pollution control laws, rules and regulations, or other Federal, State or Local agencies, the more restrictive laws, rules or regulations shall apply.

B. Construction of Temporary Berms: A temporary berm shall be constructed of compacted soil, with a minimum width of 24 inches at the top and a minimum height of 12 inches with or without a shallow ditch, constructed at the top of fill slopes or transverse to centerline on fills. Temporary berms shall be graded so as to drain a compacted outlet at a slope drain. The area adjacent to the temporary berm in the vicinity of the slope drain must be properly graded to enable this inlet to function efficiently and with minimum ponding in this area. All transverse berms required on the downstream side of a slope drain shall extend across the grade to the highest point at approximately a 10-degree angle with a perpendicular to centerline. The top width of these berms may be wider and the side slope flatter on transverse berms to allow equipment to pass over these berms with minimal disruptions. When practical and until final roadway elevations are approached, embankments should be constructed with a gradual slope to one side of the embankment to permit the placement of temporary berms and slope drains on only one side of the embankment.

C. Construction of Temporary Slope Drains: Temporary slope drains shall consist of stone gutters, fiber mats, plastic sheets, concrete or asphalt gutters, half-round pipe, metal pipe, plastic pipe, flexible rubber, or other materials which can be used as temporary measures to carry water accumulating in the cuts and on the fills down the slopes prior to installation of permanent facilities or growth of adequate ground cover on the slopes. Fiber matting and plastic sheeting shall not be used on slopes steeper that 4:1 except for short distances of 20 feet or less.

All temporary slope drains shall be adequately anchored to the slope to prevent disruption by the force of the water flowing in the drains. The base for temporary slope drains shall be compacted and concavely formed to channel the water or hold the slope drain in place. The inlet end shall be properly constructed to channel water into the temporary slope drain. Energy dissipaters, sediment basins, or other approved devices shall be constructed at the outlet end of the slope drains to reduce erosion downstream. An ideal dissipater would be dumped rock or a small sediment basin which would slow the water as well as pick up some sediment. All temporary slope drains shall be removed when no longer necessary and the site restored to match the surroundings.

D. Construction of Sediment Structures: Sediment structures shall be utilized to control sediment at the foot of embankments where slope drains outlet; at the bottom as well as in the ditchline atop waste sites; in the ditchlines or borrow pits. Sediment structures may be used in most drainage situations to prevent excessive siltation of pipe structures. All sediment structures shall be at least twice as long as they are wide.

When use of temporary sediment structures is to be discontinued, all sediment accumulation shall be removed, and all backfilled and properly compacted. The existing ground shall be restored to its natural or intended conditions.

E. Construction of Check Dams: Check dams shall be utilized to retard stream flow and catch sediment loads. Materials utilized to construct check dams are varied and should be clearly illustrated or explained in the Contractor's erosion control plan.

All check dams shall be keyed into the sides and bottom of the channel a minimum depth of two feet.

Stone check dams should generally not be utilized where the drainage area exceeds fifty (50) acres. Log and pole structures should generally not be used where the drainage area exceeds five (5) acres.

F. Temporary Seeding and Mulching: Seeding and mulching shall be performed in accordance with Section 02935, Topsoil and Seeding.

G. Brush Barriers: Brush barriers shall consist of brush, tree trimmings, shrubs, plants, and other approved refuse from the clearing and grubbing operations. The brush barriers shall be constructed approximately parallel to original ground contour. The brush barrier shall be compressed to an approximate height of three to five feet and approximate width of five to ten feet. The embankment shall not be supported by the construction of brush barriers.

H. Baled Hay or Straw Erosion Checks: Hay or straw erosion checks shall be embedded in the ground four to six inches to prevent water flowing under them. The bales shall also be anchored securely to the ground by wooden stakes driven through the bales into the ground. Bales can remain in place until they rot, or be removed after they have served their purpose, as determined by the Engineer. The

Contractor shall keep the checks in good conditions by replacing broken or damaged bales immediately after damage occurs. Normal debris clean-out will be considered routine maintenance.

I. Construction of Temporary Silt Fences: Temporary silt fences shall be placed on the natural ground, at the bottom of the fill slopes, in ditches, or other areas where siltation is a problem. Silt fences are constructed of wire mesh fence with a covering of burlap or some other suitable material on the upper grade side of the fence and anchored into the soil.

The Contractor shall be required to maintain the silt fence in a satisfactory condition for the duration of the project or until its removal is requested by the Engineer. The silt accumulation at the fence may be left in place and seeded, removed, etc., as directed by the Engineer. The silt fence becomes the property of the Contractor whenever the fence is removed.

3.2 MAINTENANCE

The temporary erosion control features installed by the Contractor shall be acceptably maintained by the Contractor until no longer needed or permanent erosion control methods are installed. Any materials removed shall become the property of the Contractor.

In the event that temporary erosion and pollution control measures are required due to the Contractor's negligence, carelessness, or failure to install permanent controls as a part of work as scheduled, and are ordered by the Engineer, such work shall be performed by the Contractor at his own expense.

Where the work to be performed is not attributed to the Contractor's negligence, carelessness, or failure to install permanent controls and falls within the specifications for a work item that has as a contract price, the units of work shall be paid for at the proper contract prices.

3.3 RUBBLE RIP-RAP

A. General

Rubble-stone rip-rap shall be constructed upon the prepared foundation, by hand, and the stones shall be set or placed as close together as is practicable in order to reduce the voids to a minimum.

When rubble-stone rip-rap is constructed in layers, the layers shall be thoroughly tied together with large stones protruding from one layer into the other.

The standard depth of rubble-stone rip-rap shall be 12 inches, unless otherwise indicated or directed, and in no instance shall be less than 10 inches in depth. Rubble-stone rip-rap shall have an average depth for each 25 square feet of surface of no less than the depth indicated on the Plans or as directed by the Engineer, or the standard depth required in these Specifications.

Each stone shall be bedded with the depth perpendicular to the surface upon which it is set. The length shall be placed as directed by the City Engineer and each main stone shall be placed against the adjoining stones with sides and ends in contact. The stone shall be placed in such a manner as to stagger all joints as far as it is possible.

B. RUBBLE RIP-RAP (PLAIN)

For plain rip-rap, the main stones shall be thoroughly "chinked" and filled with the smaller stones by throwing them over the surface in any manner that is practical for the smaller stones to fill the voids. This work shall continue with the progress of the construction. Tamping of the stones will not be required if the stones have been placed in a reasonable and satisfactory manner.

C. RUBBLE RIP-RAP (GROUTED)

For grouted rip-rap, after chinking and filling the voids between the stones shall be completely filled with grout. Care shall be taken to prevent earth or sand from filling the spaces between the stones before the grout is poured.

The grout used to fill the voids shall be composed of one part Portland cement and four parts of sand, measured by volume, mixed thoroughly with sufficient water to make a grout of such consistency that it will flow into and completely fill the voids.

Immediately before pouring the grout, the stones shall be wetted by sprinkling. The grout shall be carefully poured into the voids between the stones. This work shall begin at the lower portions of the rip-rap and progress upward. The entire bottom line of voids shall be filled with grout before the line of voids next above is poured. The pouring of the grout shall be accomplished by the use of vessels of adequate size and shape. Broadcasting, slopping, or spilling of grout from the vessels on the surface of the rip-rap will not be permitted. Progress of pouring shall be sufficiently slow to prevent the grout from oozing from the voids and flowing over the surface. During the pouring operations and continuing until the grout has assumed its initial set, fiber brooms shall be used to maintain a uniform distribution. The grouting operations shall continue until such a time as all the voids have been completely filled and the grout has set even with the surface of the rip-rap.

As soon as any section of the grouted rip-rap has hardened sufficiently, it shall be cured by sprinkling with water until it has been covered with burlap, cotton or jute mats, earth or liquid membrane-forming compound. The mats or earth shall be maintained by soaking with water for a period of not less than 72 hours. The water used for wetting and curing the grouted rip-rap shall be free from salt or alkali.

END OF SECTION

SECTION 02575

PAVEMENT REPLACEMENT AND REPAIR

PART 1 GENERAL

1.1 SUMMARY

All labor, material equipment, tools and services required for the furnishing and installation of all pavement and appurtenances thereto required for this Project shall be furnished and installed in compliance with the Contract Documents. All paving shall be accomplished as shown on the Paving Schedule included in the Contract Documents.

1.2 RELATED SECTIONS

A. Section 02223: Backfilling

1.3 REFERENCE STANDARDS

All paving construction shall be in accordance with Tennessee Department of Transportation Standard Specifications for Road and Bridge Construction-(TDOT) dated March 1, 1981, including all revisions except as revised by the City of Goodlettsville. The Contractor will be required to have a reputable paving Contractor install the permanent pavement replacement under this Contract.

PART 2 PRODUCTS

2.1 MATERIALS

All materials to be used in the replacement or repair of existing pavement shall be in accordance with the Tennessee Department of Transportation Standard Specifications for Road and Bridge Construction.

PART 3 EXECUTION

3.1 INSTALLATION

A. Pavement Restoration and Maintenance

Where force mains and sanitary sewers are constructed under paved roadway surfaces, within public right-of-ways, the Contractor shall backfill the ditch with crushed stone in accordance with Section 02223, paragraph 3.21-B-2 and paragraph 3.22-B-2 respectively, of these specifications. The top twelve (12) inches of crushed stone backfill shall be "pug-mill" mix.

Where force mains and/or sewers are constructed under paved roadway surfaces, within public right-of-ways, it shall be the responsibility of the Contractor, upon completion of the pipeline installation, to regrade the streets to similar or equal original base conditions and template that existed prior to construction. This rebasing and/or regrading shall be satisfactory to the City of Goodlettsville before the streets are accepted for paving operations. The Contractor shall further be responsible for the maintenance of the disturbed streets until repaving operations have been initiated.

B. Adjustment of Castings

The attention of the Contractor is called to the requirement that all water valve boxes, manhole castings, and other castings will be required to be adjusted to meet the finished grade of any permanent pavement replacement.

The cost of making the necessary adjustments to all castings shall be considered an integral part of the Contract, and no separate payment will be allowed therefore.

C. Curb and/or Gutters

The attention of the Contractor is called to the fact that curb and/or gutters may exist.

The Contractor will be responsible for replacing the curb and/or gutter sections of the same material, including any base, as that removed or disturbed. All edges broken shall be sawed or cut off at right angles prior to replacement.

The cost of replacing any curb and/or gutter shall be considered an integral part of the paving and shall be merged into the unit price bid for paving.

D. Paving

1. Full Width Pavement Replacement

   This item shall include all labor, materials, and equipment necessary to furnish and install the base stone binder and surface course.

   Furnish and install the thicknesses indicated for the lengths shown in accordance with the City of Goodlettsville latest revised specifications.

   In the event additional crusher run stone base is required by the Engineer, the cost for placing the crusher run stone shall be merged in to the price for pavement replacement; no additional payment will be allow therefore.

2. Permanent Pavement Trench Repair Replacement

   This item shall pertain to that portion of the sewer line trenches that cross

existing streets only and shall include the construction and replacement of the permanent street pavement to the details as follows:

a. It shall include removing the temporary pavement as necessary for the construction of the permanent pavement.

b. A minimum two-foot (2') cutback of existing pavement from the edges of the existing trench.

c. The permanent pavement replacement shall consist of eight (8) inches of crusher run stone, nine (9) inches bituminous binder mix (307-B Modified Tennessee Department of Highway Standard Specifications), two (2) inches asphalt surface course mix (411-E Tennessee Department of Highway Standard Specifications), and shall match the existing street surface.

Permanent pavement replacement, as specified herein, shall be installed within thirty (30) days after all work is completed within a street, unless directed otherwise by the Engineer.

The installation shall meet the latest requirements of the Tennessee Department of Transportation or the City of Goodlettsville.

END OF SECTION

SECTION 02730

SANITARY SEWERAGE SYSTEM

PART 1 GENERAL

1.1 SUMMARY

Work under this section includes the providing of all labor, material, equipment, tools and services required for the furnishing, installation, construction and testing of all gravity sewers, pressure pipelines and appurtenances thereto required.

1.2 RELATED SECTIONS

A. Section 02222: Excavating

B. Section 02223: Backfilling

C. Section 03300: Concrete

1.3 REFERENCE STANDARDS

A. American Water Works Association (AWWA)

C-210	Ductile Iron Coal-Tarepoxy Coating
C-302	Reinforced Concrete Pipe (Non-Cylinder)
C-500	Gate Valves 3" through 48" for Water and Sewerage Systems

B. American National Standards Institute (ANSI)

A-21.4	Cement Mortar Lining for Ductile Iron and Gray Iron Pipe and Fittings for Water
A-21.10	Ductile-Iron and Gray Iron Fittings, 3"-48" for Water and Other Liquids
A-21.11	Rubber Gasket Joints for Ductile Iron and Gray Iron Pressure Pipe Fittings
A-21.51	Ductile Iron Pipe, Centrifugally Cast in Metal Molds or Sand-Lined Molds, for Water or Other Liquids

C. American Society of Testing Materials (ASTM)

A-48	Gray Iron Castings
C-39	Compressive Strength of Cylindrical Concrete Specimens
C-76	Reinforced Concrete Culvert, Storm Drain, and Sewer Pipe
C-172	Sampling Freshly Mixed Concrete
C-443	Joints for Circular Concrete Sewer and Culvert Pipe, Using Rubber Gaskets
C-478	Precast Reinforced Concrete Manhole Sections
C-497	Testing Concrete Pipe, Sections, or Tile

C-923	Resilient Connectors Between Reinforced Concrete Manhole Structures and Pipes
C-1214	Concrete pipe sewer lines by negative air pressure (vacuum)
D-1784	Rigid Poly (Vinyl Chloride) Compounds and Chlorinated Poly (Vinyl Chloride) Compounds
D-2241	Polyvinyl Chloride (PVC) Plastic Pipe (SDR-PR)
D-3034	Type PSM Poly(vinyl chloride)(PVC) Sewer Pipe and Fittings
D-3139	Joints for Plastic Pressure Pipe Using Flexible Elastomeric Seals
D-3212	Joints for Drain and Sewer Plastic Pipe Using Flexible Elastomeric Seals

Where materials and methods are indicated in these specifications as being in conformance with a standard specification, it shall refer in all cases to the latest edition of the specifications and shall include all interim revisions. Listing of a standard specification without further reference indicates that the particular material or method shall conform to such listed specification.

1.4 SUBMITTALS

A. Test Requirements

The attention of the Contractor is directed to the provisions of the Conditions of the Contract requiring the inspection and testing of materials to be incorporated in the work included under this Contract. The required tests shall be done by an independent testing laboratory, selected by the Contractor and approved by the Engineer. All such tests shall be at the expense of the Contractor, and no separate payment will be allowed therefore.

All materials to be incorporated in the construction of gravity sewers, pressure pipelines, and appurtenances required under this Contract shall be subject to inspections and tests as follows:

1. Concrete Sewer Pipe

   Sanitary sewer pipe shall be in conformance with the following specifications for each type furnished and installed under this Contract:

   a. Reinforced Concrete Pipe shall conform to ASTM C-76, Wall "B", and Class as specified on the Contract Drawings.

      Where the total quantity of concrete or clay sanitary sewer pipe required on this Contract, including all pipe sizes, is less than one thousand (1,000) feet, the pipe shall be visually inspected by the Engineer at the site for conformance to the required specifications.

      Where the quantities, including all sizes, exceed the above, tests shall be by independent laboratory for conformance with the required specifications. Test shall be made on one-half of one percent (0.5%) of the number of pipe, of each size required, but in no case less than two (2) specimens of each size.

2. Concrete Sewer Pipe Joints
   Concrete sewer pipe joints shall be in conformance with the following specifications for each type of pipe furnished and installed under this Contract:

   a. Joints for concrete sewer pipe shall conform to ASTM C-443.

   The number and manner of tests for sewer pipe joints for conformance to the required specifications shall be the same as required for the sewer pipe.

3. Ductile Cast Iron Gravity and Pressure Sanitary Sewer Pipe and Fittings
   Where the total quantity of ductile cast iron gravity and pressure sanitary sewer pipe and fittings on this Contract, including all sizes, is less than two hundred (200) tons, each piece shall bear the manufacturer's serial number and shall be certified by the manufacturer for conformance with ANSI A21-51 AWWA C-151 and ANSI A21.10 AWWA C-110.

   Where the quantity on this Contract, including all pipe sizes, exceeds the above, tests shall be by independent laboratory for conformance with ANSI A21-51 AWWA C-151 and ANSI A21.10 AWWA C-110.

4. Polyvinyl Chloride (PVC) Pressure Sanitary Sewer Pipe and Fittings
   The polyvinyl chloride (PVC) pipe shall be in conformance with ASTM Specification D-2241 and shall consist of Type I, grade 1, PVC compound conforming to ASTM D-1784. All pipe shall be Class 200-SDR 21.

   Acceptance of all PVC pipe and joints shall in part be based on the receipt of a written certification. This certification shall consist of a copy of the manufacturer’s test report or a statement by the seller, accompanied by a copy of the test results, that the material has been sampled, tested, and inspected in accordance with the provisions of applicable ASTM standards. Each certification so furnished shall be signed by an authorized agent of the seller or manufacturer. The contractor shall secure this certification from the manufacturer and furnish to the Engineer. The quantity of PVC pipe and joints to be tested shall not be less than that specified for concrete and clay pipe and joints in “Test Requirements”, paragraph B of this Section of these Specifications.

5. Polyvinyl Chloride (PVC) Sewer Pipe 8", 10", 12" and 15"
   The polyvinyl chloride (PVC) pipe shall be in conformance with ASTM Specification D-3034, SDR35 of the latest revision. Pipe jointing shall be accomplished by the use of flexible elastomeric gaskets conforming to ASTM Specification D-3212.

   Acceptance of all PVC pipe and joints shall in part be based on the receipt of a written certification. This certification shall consist of a copy of the manufacturer's test report or a statement by the seller, accompanied by a copy of the test results, that the material has been sampled, tested, and inspected in accordance with the provisions of applicable ASTM standards. Each certification so furnished shall be signed by an authorized agent of the seller or manufacturer. The Contractor shall secure this certification from the manufacturer and furnish to

the Engineer. The quantity of PVC pipe and joints to be tested shall not be less than that specified for concrete and clay pipe and joints in "Test Requirements", paragraph B of this Section of these Specifications.

6. Concrete
For each separate class of concrete of twenty-five (25) cubic yards placed, two (2) standard six-inch (6") concrete cylinders shall be made and tested.

The cylinders of each set shall be molded from the same sample of concrete and tested at seven (7) and twenty-eight (28) days.

Sampling of concrete for test purposes shall be per ASTM C-172. Testing of specimens shall be per ASTM C-39.

7. Miscellaneous Materials
All material used on this project shall be visually inspected by the Engineer at the site for conformance to the required specifications.

Where reasonable doubt exists that said material fails to meet the specifications, the Engineer may require certified mill test, samples and/or test by independent laboratory, or other suitable form of verification that the material meets the required specifications.

1.5 PRODUCT DELIVERY, STORAGE AND HANDLING

A. Materials delivered to site shall be inspected for damage, unloaded and stored with the minimum of handling. Store materials on site in enclosures or under protective coverings. Store plastic piping and rubber gaskets under cover and protect from exposure to direct sunlight. Store materials above ground. Interior of pipe and fittings shall be kept free of dirt and debris.

B. Pipe, fittings, valves, hydrants and other accessories shall be handled to insure delivery to the point of installation in sound undamaged condition. If coatings or linings of pipe or fittings are damaged, such pipe or fittings shall be removed from the site and new materials furnished at no extra cost. Pipe shall not be left in the sunlight, but shall be stored under cover and protected from exposure to direct sunlight.

PART 2 PRODUCTS

2.1 GENERAL

All material and equipment shall be furnished by an established and reputable manufacturer or supplier. All materials and equipment shall be new and shall be first-class ingredients and construction, designed and guaranteed to perform the service required and shall conform to the following specifications or shall be the product of the listed manufacturer or equal thereto as approved by the Engineer.

2.2 MATERIAL

A. Concrete, and/or Polyvinyl Chloride (PVC) Gravity Sanitary Sewers

1. Concrete, and/or PVC Sewer Pipe

The sanitary sewer pipe furnished and installed on this project may be concrete, or PVC conforming to the following specifications, at the Contractor's option unless shown otherwise on the Contract Drawings or in the Contract.

All concrete sewer pipe furnished and installed on this project shall be reinforced concrete pipe, conforming to the requirements of ASTM C-76, Wall "B", Class III, IV or V as specified on the Contract Drawings. Laying lengths of reinforced concrete sewer pipe shall not exceed eight (8) feet unless written approval of the owner is secured. Pipe shall be manufactured with machine Bell Pallets with a maximum slope of 2 degrees.

Polyvinyl chloride (PVC) sewer pipe furnished and installed on this project shall be in conformance with the requirements of ASTM Specification D3034 for SDR35 pipe. Laying lengths shall be regular commercial lengths not to exceed thirteen (13) feet.

All concrete pipe shipped to the project shall bear the mark of an approved testing laboratory showing that such pipe was tested and approved by the testing laboratory at the site of the manufacturer's plant. Testing of the pipe shall conform to ASTM C-76 and C-497. Certified test reports shall be furnished to the Engineer.

All PVC pipe shipped to the project shall bear the mark of an approved testing laboratory showing that such pipe was tested and approved by the testing laboratory at the site of the manufacturer's plant. Testing of PVC pipe shall conform to ASTM D3034. Certified test reports shall be furnished to the Engineer.

The quantity of concrete and PVC pipe to be tested shall not be less than that specified in "Test Requirements", paragraph 1.5-B of this Section of the Specifications.

2. Joint Material for Concrete, and/or PVC Sewer Pipe

The Contractor shall furnish the Engineer with complete technical and construction data on the jointing material he proposes to use on this Project and shall obtain the Engineer's approval prior to incorporating the jointing material into the work.

The jointing material furnished and installed on this Project for use on concrete sewer pipe shall be rubber gasket type, "Press Seal", "Tylox", or approved equal conforming to the requirements of ASTM 443. These joints shall be installed in accordance with the manufacturer's recommendations.

The jointing material furnished and installed on this Project for use on PVC sewer pipe shall be flexible, elastomeric type, push-on joints conforming to the requirements of ASTM D-3212. These joints shall be field assembled in

conformance with the manufacturer's recommendations.

The testing and certification requirements for sewer pipe joints shall be similar to those described for sewer pipe, and shall be in conformance with the applicable ASTM standards. The minimum number of joints to be tested for concrete and PVC pipe shall be specified in "Test Requirements", paragraph 1.5-B of this Section of the Specifications.

B. Ductile Iron Gravity and/or Pressure Line Sewers

1. Ductile Iron Sewer Pipe
The ductile iron pipe and fittings furnished and installed on this project shall conform to the requirements of ANSI 21.51/AWWA C-151 and ANSI A21.10/AWWA C-110, respectively. Pipe Class shall be 52 unless otherwise indicated on the Drawings. All ductile iron pipe and fittings shall be cement-mortar lined in accordance with ANSI A21-4/AWWA C-104. Pressure rating for fittings in sizes 4" through 24" shall be 350 psi minimum for ductile iron. Above 24" in size, minimum pressure rating for fittings shall be 250 psi for ductile iron.

All ductile iron pipe and fittings shipped to the project shall bear the mark of an approved testing laboratory showing that such pipe was tested and approved by the testing laboratory at the site of the manufacturer's plant. Testing shall conform to all requirements of ANSI 21.51/AWWA C-151 and ANSI A21.10/AWWA C-110. Certified test reports shall be furnished to the Engineer.

The quantity of ductile iron pipe and fittings to be tested shall not be less than that specified in "Test Requirements", paragraph 1.5-B of this Section of these Specifications.

2. Joint Material for Ductile Iron Gravity and/or Pressure Line Sewers
The joints used for the pipe furnished under this Contract shall be the slip-type, single gasket joints and shall conform to all requirements of ANSI, A21.11 and AWWA C-111. The joints shall be good for 150 pounds per square inch of operating pressure.

The joint material furnished and installed on this Project for use on ductile iron gravity and/or pressure line sewers shall be the gasket type joint equal to "Bell-Tite", "Fast-Tite", or "Tyton" fittings. Mechanical type fittings may be used on short sections of ductile iron gravity sewers if approved by the Engineer. Fittings shall not be lighter than the pipe for which they are used and shall be field assembled in conformance with the manufacturer's directions.

3. Air Relief Valve
An air relief valve shall be placed at the necessary high points in the force main to prevent air locking.

C. Polyvinyl Chloride (PVC) Pressure Sanitary Sewer Pipe

1. Polyvinyl chloride pressure sewer pipe shall conform to Designation ASTM D-2241 and shall consist of Type I, Grade 1, PVC compound conforming to ASTM D-1784. All pipe shall be Class 200-SDR 21.

2. Pipe shall have integral bell and spigot joints. Provisions shall be made for contraction and expansion at each joint with an elastomeric ring. Threaded or solvent welded type joints shall not be used. Bell end pipe and couplings with elastomeric gaskets shall meet the requirements of ASTM D-3139.

3. The Contractor shall install a continuous run of plastic metallic tape above the top of the PVC pipe at 18 to 24 inches below finished grade. Tape shall be suitable for detection with metal pipe location equipment, labeled to identify contents of pipe, and brightly colored to contrast with the soil.

4. Pipe shall carry National Sanitation Foundation (NSF) seal, and be factory marked with manufacturer's identification, pipe size, material and pressure rating.

5. Air Relief Valve
   An air relief valve shall be placed at the necessary high points in the force main to prevent air locking.

D. Six-Inch (6") Tee Connections for House Services
Construction, installation and material of pipe containing tee openings and the joint materials for the same shall be in conformance with the requirements of the specifications for that portion of the main sewer where installed. All concrete tees shall be machine made in one piece and shall be manufactured integrally by the same process as plain concrete sewer pipe and shall meet ASTM Specifications C-76 with revisions.

E. Six-Inch (6") House Services
The furnishing, constructing and installing of all materials and/or methods used in the construction of six-inch (6") house sewer services shall be as specified in the applicable provisions of paragraph 3.1-A of this Section and paragraph 3.1-B of this Section of the Contract Specifications and as shown on Drawing, except as herein provided. Where there has been no 6-inch tee installed for a house (lot), saddling the main is permitted. The required (specific) saddle to be used is a Romac Industries, Inc. Style "CB" Sewer Saddle with appropriate range gasket per pipe diameter.

F. Service Reconnections
The furnishing, constructing and installing of all materials and/or methods used in the construction of reconnecting all "live" sanitary services shall be as specified in paragraph 3.2-E of this Section of the Contract Specifications and as shown on

Drawing.

G. Polyvinyl Chloride Sewer Cleanout Assemblies
Polyvinyl Chloride (PVC) sewer pipe and fittings furnished and installed on this project for cleanout assemblies shall be in conformance with Paragraph 2.2 - A of this section using flexible joints if replaced from the main. If a cleanout assembly is inserted into an existing lateral, the PVC pipe and fittings may conform to 2.2-A or ASTM D-1785, Schedule 40 PVC1120 with D-2466 solvent welded fittings.

H. Manholes and Appurtenances

1. Standard Manhole Sidewall

Standard manhole sidewall shall be constructed of concrete of the following types:
a. Precast concrete rings
b. Precast concrete manhole sidewalls with base
c. Precast concrete monolithic manhole sidewall
d. Precast concrete monolithic manhole with base

All precast concrete manhole sidewall shall conform to the requirements of ASTM C-478.

2. Concrete Manhole Bases and Fillets
Concrete manhole bases and fillets shall be precast. In an instance where a manhole must be placed over an existing line "Dog House" manholes are prohibited. A precast base and fillet must be used. The manhole sidewall shall conform to the following requirements:

a. Precast Manhole Bases and Fillets
All materials and methods used to precast manhole bases and/or fillets shall conform to the applicable provisions for precast manhole sidewall as set out in these Specifications.

Class of Concrete	"B"
Gals. Water per sack of cement	5.50
Min. bags cement per cub yard of concrete	5.75
Min. 28 day strength 1 cylinder lbs./sq.inch	2800
Min. 28 day strength average for 5 cylinders lbs/sq.inch	3500

Slump in inches	2-4

3. Manhole Frames and Covers
   Manhole frames and covers shall be made of cast iron conforming to the details shown on the Contract Documents and meeting the requirements of ASTM A-48, Class 30.

   All casting shall be made accurately to the required dimensions and shall be sound, smooth, clean and free from blisters and other defects. Defective castings which have been plugged or otherwise treated to remedy defects shall be rejected. Contact surfaces of frames and covers shall be machined so that the covers rest securely in the frames with no rocking and with the covers in contact with the frames for the entire perimeter of the contact surface. No “Bolt Down” frames and covers are to be used unless prior approval by the City Engineer has been granted. The required frame and cover is John Bouchard and Sons #1150 and #1123, Traffic Bearing and Traffic Bearing Watertight Type respectively, as per the Standard Detail-Manhole Frames and Covers. All Manhole Frames must have a minimum 24” clear opening.

4. Manhole Drop Pipe Assembly
   Pipe, specials and fittings used in the construction of the manhole drop assembly shall conform to the details shown on the Contract Documents and meet the requirements of that portion of the main sewer where installed.

   The support for the drop assembly shall be concrete and shall conform to the details shown on the Contract Documents and the requirements as specified hereinafter.

   Concrete for the base and support of the drop assembly shall be Class "A" as specified in these Specifications.

5. Pipe Resilient Connectors to Manholes
   Resilient connectors between the manhole and pipes such as Kor-N-Seal I or II, 1” to 18” and 18” to 59” respectively, shall be installed in the precast or cored opening manhole wall. Sealing material shall be installed in the precast or cored opening. The resilient connector shall meet the requirements set forth in ASTM C-923. An external bond made entirely of corrosion resistant stainless steel shall be used to affect the seal around the pipe.

6. Sealant and Coatings

   a. Sealant to be used in joints and where specified shall be an approved

flexible plastic gasket similar to Ram-Nek.

b. All precast manholes shall be cast with XYPEX® Admix C-1000 in the concrete for waterproofing and corrosive protection. The manufacturer's addition rate for Concentrate C-1000 is 3% by weight of cement. A red dye must be added to the concentrate, which renders the concrete a reddish-pink color.

7. Stubouts
Stubouts shall be the "bell" or "hub" end of a joint of pipe conforming to the requirements of the main sewer.

8. Manhole Steps
Manhole steps shall be inserted and securely embedded in the manhole sidewall and shall be non-skid design. Manhole steps will be made of Alcoa Part #15295 Aluminum OR M.A. Industries Part #PSI-45 Plastic or approved equal for each. The entire project shall have the same manhole step materials.

9. Vent Pipe Assemblies
The pipe shall be Schedule 40 steel pipe or Class 52, ductile cast iron pipe, cement mortar lined. Pipe surface preparation shall be done using SSPC-SP10 Near-White blast cleaning. Only one coat is required: TNEMEC 435 PERMA-GLAZE AT 30.0 – 40.0 MILS D.F.T.

10. Concrete Encasement and/or Cradle
Concrete for concrete encasement and/or cradle shall be Class "C" as specified in Section 03300.

I. Pumping Stations

1. Radio telemetry shall be supplied with the pump station. The Contractor is responsible for providing the appropriate equipment to tie into the Owner's (City of Goodlettsville's) existing Supervisory Control and Data Acquisition (SCADA) system. This includes and is not limited to all radios, antennas, cables, conduit and antenna by masts and lightning protection.

2. The telemetry equipment supplier shall provide radio path surveys. All paths shall be designed for at least 99.9% reliability. The telemetry supplier shall provide all necessary forms, completely filled out, to the end user for radio frequency coordination and FCC licensing. The only action required on the part of the end user shall be to sign the forms. The telemetry system supplier shall pay all licensing fees.

3. Where a repeater station is required, the equipment supplier shall coordinate

with the Owner for all possible locations.

4. All pump station components must have prior approval by the City Engineer i.e. pumps, valves and piping.

5. All pump stations must have emergency pump out provisions.

6. All pump stations must have a twelve (12) month warranty and at the eleventh (11th) month be reinspected to be certain there are no outstanding problems or issues.

7. All pump stations are to have Backup Emergency Generator Power.

PART 3 EXECUTION

3.1 INSTALLATION

A. Concrete and/or Polyvinyl Chloride (PVC) Sanitary Sewers

1. General

The Contractor shall be responsible for setting all grade stakes, lines and levels and preparation of cut sheets. The Contractor shall provide level, level rod and tripod on the job site at all times for the purpose of checking grades, as deemed necessary by the Engineer.

All grade and alignment stakes for construction under this project shall be set by a land surveyor registered to practice in the State, and all costs thereof shall be borne by the Contractor. The requirement for this work to be accomplished by a registered land surveyor may be waived by the Engineer in the event the Contractor desires to utilize his own personnel who are qualified to set the grade and alignment stakes. The Contractor shall assume all responsibility for the correctness of the grade and alignment stakes.

The contractor may use batter boards or a properly calibrated beam device. No claim for extra work shall be allowed for alleged inaccuracy of the laser beam device. Grade hubs for laser beams shall not exceed 100 feet apart with centerline hubs every 50 feet to check laser and grade between manholes.

If the Contractor elects to use batter boards, he shall provide and maintain on the work at all times a gauge rod of sufficient length to reach from the invert of the sewer pipe being laid to the top line strung on the three batter boards. The gauge rod shall be graduated and numbered each foot of its entire length. The gauge rod shall be equipped with either a plumb line or two spirit levels and the utmost care used to insure a truly vertical gauge rod at the time a reading is taken and

pipe is being set.

One week prior to the commencement of trench excavation, the Contractor shall prepare and submit to the Engineer for review four (4) copies of detailed Cut Sheets showing the beginning and ending manholes; the distance between manholes; the grade, size and type of line; the depth of cut; etc. Cut Sheets shall bear the seal of either a Land Surveyor or Engineer registered in the State of Tennessee**.** The form of Cut Sheet shall be provided to the Contractor. All expense for the preparation of Cut Sheets shall be borne by the Contractor and be included in the unit price bid per foot of pipe.

Cut Sheets must be reviewed by the Engineer in writing before trenching operations may be permitted. It shall be the responsibility of the Contractor to prepare Cut Sheets (one week) in advance of his anticipated trenching schedule.

The junction of two or more sewers shall be made in strict conformance with the Contract Drawings. The cost of all connections shall be included in the Contract price for the new sewers unless specifically provided in the Contract.

New sewer connections with old existing sewers shall be made within a manhole. Where an old manhole exists at the point of connection of new and old sewers that is made of brick, the brick manhole shall be replaced by a new precast or poured in place manhole adhering to the specifications of this document. The Contractor shall reconstruct fillet (invert) of the manhole to accommodate the new connection. The cost of such work shall be included in the Contract price for new main sewer unless other payments are specifically provided for in these specifications.

Where no old manhole exists at the point of connection, a new manhole shall be constructed of the size and type shown on the Contract Drawings. Payment for such additional manholes will be made at the unit price in the Contract for new manholes, which price shall include all work necessary to make the connection.

Connections of new sewers to existing sewers when encountered in construction and not shown on the Contract Drawings shall be made where ordered by the Engineer. Such connections shall be made within a manhole, except for house sewer and drain connections. When such sewer connections are made within an existing manhole, any added work involved will be paid for in accordance with the procedure outlined in the Conditions of the Contract. If the Engineer orders such connections be made in a new manhole, such new manhole will be paid for at the prices established in the Contract, which price shall include all work necessary to make the connections.

When connections are made with sewers carrying sewerage or water, special care

must be taken that no part of the work is built under water; a flume or dam must be installed and pumping maintained if necessary to keep the new work in the dry until completed and concrete or mortar has set up.

Junctions for future sewer connections indicated on the Contract Drawings on precast concrete manholes shall be provided with a 2' - 0" long stubout connected to the manhole with a pipe resilient connector unless shown otherwise on the plans. The stubout shall be sealed by means of an approved stopper.

Check dams shall be installed in the bedding and backfill of all new or replaced sewer lines to limit the drainage area subject to the french drain effect of grave bedding. Dams shall consist of compacted clay bedding and backfill at least three (3) feet thick to the top of the trench and cut into the walls of the trench two (2) feet. Alternatively, concrete may be used, keyed into the trench walls. Dams shall be placed no more than 500 feet apart. The preferred location is upstream of each manhole. All stream crossings will include check dams on both sides of the crossing.

There shall be no physical connection between a public or private water supply system and a sanitary sewer or appurtenance thereto which would permit the passage of any wastewater or polluted water into the potable supply. Horizontal separation: Whenever possible, sewers should be laid at least 10 feet, horizontally, from any existing or proposed water main. Should local conditions prevent a lateral separation to 10 feet, a sewer may be laid closer than 10 feet to a water main if it is laid in a separate trench and if the elevation of the top (crown) of the sewer is at least 18 inches below the bottom (invert) of the water main. Vertical separation:
Whenever sewers must cross under water mains, the sewer shall be laid at such an elevation that the top of the sewer is at least 18 inches below the bottom of the water main. When the elevation of the sewer cannot be varied to meet the above requirements, the water main shall be relocated to provide this separation or reconstructed with the mechanical-joint pipe for a distance of 10 feet on each side of the sewer. One full length of water main should be centered over the sewer so that both joints will be as far from the sewer as possible. When it is impossible to obtain proper horizontal and vertical separation as stipulated above, both the water main and sewer shall be constructed of the mechanical-joint-ductile-iron pipe and shall be pressure-tested to assure water-tightness before use as a water line and sewer line respectively. The Engineer reserves the right to make minor changes in location during construction to meet and situations uncovered during construction.

2. Pipe Laying
Installation of concrete pipe shall conform to ASTM C-12 and these Specifications. Installation of PVC pipe should conform to ASTM D-2321 and these Specifications. In case of a conflict between these specifications and the

above Standards, the more stringent requirements shall apply. Each pipe shall be laid on an even, firm bed, so that no uneven strain will come to any part of the pipe. Particular care shall be exercised to prevent the pipes bearing on the sockets. Bell holes for bell and spigot pipe shall be dug at each point as hereinbefore specified. Each pipe shall be laid in the presence of the inspector. The bell end of the pipe shall be laid upgrade.

The foundation under, the bedding around and over, and the backfill within the trench of the sewer pipe shall be as specified in these specifications under Section 02223 - "Backfilling".
The interior of the sewer shall, as the work progresses, be cleaned of all dirt, jointing material and superfluous materials of every description. On small pipe sewers where cleaning after laying must be difficult, a swab or drag shall be kept inside the pipe line and pulled forward past each joint immediately after its completion.

All pipe shall be completely shoved home. On pipe of the tongue and groove type, 30" in diameter and larger, pressure must be applied to the center of each pipe as it is laid by a winch and cable or other mechanical means properly set and operated to insure that the spigot is all the way home in the socket, and that the sewer joint is of uniform size throughout the circumference of the pipe.

Laying holes in pipe if used shall be tapered and shall be plugged before backfilling with a tapered concrete plug set in mortar or mastic.

B. Ductile Iron Gravity and/or Pressure Line Sewers
Ductile iron gravity sewers shall be installed in compliance with the applicable provisions of paragraph 3.1-A of this Section of these Specifications.

Where ductile iron gravity sewer is supported on piers, the installation shall be as detailed on the Contract Drawings and as directed by the Engineer during construction in compliance with the applicable provisions of these specifications.

It shall be the Contractor's responsibility to install the ductile iron pressure sewer to the line and grade as shown on the Contract Documents.

It will not be necessary that the pressure line sewer pipe be laid with the use of batter boards, but the Contractor shall take care that the installed pipe has the required depth of cover as shown on the Contract Drawings and that the pipe is installed to a straight line.

All bends, tees, crosses, plugs, etc., shall be backed up and anchored with concrete so that there will be no movement of the pipe due to internal or external pressures. The concrete shall be placed around the fittings and completely fill the space between the fittings and the wall of the trench as shown on the Contract Drawings. Concrete shall

conform to the applicable provisions of paragraph 3.1-F of this Section of these Specifications. The cost of furnishing and installing said concrete anchors shall be included in the Contract unit price of pressure line sewer.

Pressure line sewer may be backfilled prior to testing; however, the Contractor shall assume the risk of re-excavation to the pipe if the system fails to meet the requirements of the pressure test. Any defects, cracks or leakage that may develop, or that may be discovered either in the joints or in the body of the casting, shall be promptly made good by the Contractor, at his own expense, to the satisfaction of the Engineer.

Proper and suitable tools and equipment for the safe and convenient handling and laying of the pipes and fittings shall be used. Great care shall be taken to prevent the pipe coating from being damaged, particularly on the inside of the pipes and fittings.

All sewer line laid across creeks shall be Ductile Iron Pipe (DIP) with a concrete encasement as per the Standard Concrete Encasement Detail.

C. Six-Inch (6") Tee Connections for House Services

This item shall include the furnishing, installing and plugging six-inch (6") tee connections for future connections of house sewer services at locations shown on the Contract Drawings or as specified by the Engineer during construction.

Construction, installation and material of pipe containing tee openings and the joint materials for the same shall be in conformance with the requirements of the specifications for that portion of the main sewer where installed. All concrete tees shall be machine made in one piece and shall be manufactured integrally by the same process as the concrete sewer pipe and shall meet ASTM Specifications C-76 with revisions. No tee shall have stubs or outlets attached by hand or other means except by the above process. The sewer service line shall be extended a minimum of 4 feet and capped as specified under paragraph 3.1-D of this Section of these Specifications.

D. Six-Inch (6") House Sewer Services

This item shall include furnishing and installing six-inch (6") house sewer service sanitary sewers at the locations as shown on the Contract Drawings or as directed by the Engineer during construction. It shall also include bends, caps and joint material as specified herein.

The furnishing, construction and installing of all materials and/or methods used in the construction of six-inch (6") house sewer services shall be as specified in the applicable provisions of paragraph 3.1-A of this Section and paragraph 3.1-B of this section of the Contract Specifications and as shown on Drawing, except as herein provided.

The location of all six-inch (6") house sewer services shall be as directed by the Engineer during construction. It will not be necessary that said sewers be laid with a batter line. The gradient will be determined by the Engineer, but in no case shall it be less than one-eighth-inch (1/8") per foot.

The pipe material and method of jointing shall be the same as specified for the main sewer.

Where directed by the Engineer, the Contractor shall saw off the bell of the last joint of 6" sewer pipe laid on each service line and cap the end of each service line with a Quik Cap flexible (PVC) cap (Fernco or approved equal) with an external band made entirely of corrosion-resistant stainless steel to effect the seal around the pipe. No additional payment will be allowed for cutting and capping the service pipe.

Whenever any manhole is core drilled specifically for insertion of a six inch (6”) service line the pipe shall be inserted at an elevation 0.20 feet higher than the Invert Elevation Out of the manhole just as if the six inch service pipe (line) were an Invert Elevation Inlet Pipe. Core drilling shall not only be into the base or sidewall of the manhole but also into table so as to create an invert for the service itself resulting in a continuous flow rate.

E. Cleanout Assembly

This item shall include the furnishing of all materials and doing all work to provide a six-inch (6") single cleanout assembly at the end of each service as per details shown on the Contract Drawings. Cleanout shall be complete as shown on detail. All six inch (6”) service cleanouts are required to have a box with frame and cover. In driveways (Traffic Bearing Areas) the cleanout box shall be a precast Cloud Concrete Valve Box Part #UT-045 with a John Bouchard & Sons Frame and Cover Part #8006. In easements the cleanout box will be a Mid-States Plastics, Incorporated Part # MSBC1015-12 with a Sigma Corporation RUSSCO SEWER LID Cover Part #LC-2512S. Box and frame and cover shall be complete as shown on detail.

F. Service Connections

1. General

This item shall include the furnishing of all materials and doing all work necessary to reconnect each “live” sanitary sewer service to the new sanitary sewer collector lines. It shall be the responsibility of the Contractor to determine whether a service is “live” and whether it is sanitary sewer. No payment will be made for reconnecting a “dead” service.

2. Cleanout Assembly

Each reconnected service shall be provided with a six-inch (6") single cleanout assembly as per details shown on the Contract Drawings. Cleanout shall be complete as shown on detail. Reconnected service cleanouts will also be

installed with box, frame and cover as specified in Section 3.1-E of these Specifications.

3. Reconnection

Reconnections of dissimilar pipes shall be made with a corrosion resistant coupling with stainless steel hose clamps (Fernco or approved equal). Reconnection shall be as per details shown on the Contract Drawings.

G. Manholes and Appurtenances

This item shall include the furnishing of all materials and doing all work necessary for the complete construction of standard and/or special manholes of the types, sizes, shapes, dimensions and at the locations shown on the Contract Documents. No BOLT DOWN manholes unless approved by the City Engineer.

1. Manhole Bases and Fillets

a. Precast Manhole Bases

The contractor shall install the precast concrete manhole base upon a crushed stone (No. 67, 57 or approved equal) bed that is a minimum of six (6) inches thick. This bed shall be carefully brought to the required grade. Care shall be taken that the bed is level and even so that when the precast unit is set in place, the manhole sidewall will be installed plumb and the concrete manhole base is in full contact upon the gravel base.

The precast manhole base shall be a minimum of eight (8) inches in thickness. For units that require the fillets to be poured-in-place, a minimum of two (2) inches shall be allowed from the inside of the base to the Invert of the downstream pipe for the construction of the fillet.

Backfilling operations, as specified herein, may begin after the installation of the precast manhole sidewall with base has been completed. Upon completion of the backfilling operations, traffic may be allowed on the structure.

b. Fillets

Except as otherwise specified, fillets in manholes shall be tapered uniformly between the inverts of the inlet pipe and the outlet pipe. Fillets in junction manholes shall be constructed with curved channels for side streams so as to minimize turbulence as shown on detail. Fillets in end manholes shall be shaped to drain to the discharge pipe.

In cases where the invert of the inlet pipe(s) is six (6) inches or more above

the invert of the outlet pipe, the flow line of the fillet at the inlet side shall not be greater than six (6) inches above the invert of the outlet pipe so as to provide clearance for maintenance or testing equipment.

Fillets shall be neatly and uniformly shaped, shall have a brushed finish, and shall be constructed of concrete as specified herein. No cement mortar shall be used to obtain the required shape or finish.

All cost of manhole fillets shall be included in the Contractor unit price, and no separate payment will be allowed therefore.

2. Manhole Sidewall

a. Precast manhole sidewall

(1) The Contractor shall carefully order the precise manhole sidewall to meet the required field conditions. The height of the unit in place shall be such so as to allow adjusting rings to be placed on top of the manhole transition section prior to setting the casting. A minimum of two (2) inches and a maximum of ten (10) inches of precast concrete adjustment rings will be allowed. A precast concrete adjusting ring must be used for this purpose.

(2) The “corbell” section of the manhole sidewall shall be cast in the shape of a concentric cone.

(3) At all joints of precast manhole sidewall, an approved flexible, plastic gasket material similar to Ram-Nek shall be applied to the joint surface prior to the placement of the next manhole section. Sufficient gasket material shall be used to fill the void in the joint.

(4) The Contractor shall take care while backfilling that the backfill material shall be brought up all around the manhole sidewalls in equal levels simultaneously.

(5) All pipe line connections to the manhole sidewall shall be made with resilient connectors as specified hereinafter.

3. Precast Manhole Flat Top

Where necessary because of height restrictions, a standard precast “flat-top” manhole slab may be used. This top shall be installed only where the manufacturer cannot cast a straight wall with corbell section unit to meet the required height of the manhole. A flat-top manhole slab may be used only

within the height ranges as follows:

a. The maximum height allowed for a completed standard “flat-top” manhole shall be six (6) feet. This vertical centerline height shall be measured from the invert of the outlet pipe to the top of the manhole casting. Above this height, a manhole with a corbel section shall be installed.

b. The minimum height allowed for a completed standard “flat-top” manhole shall be four (4) feet. (Vertical height measured same as maximum height.) Below this height a shallow type manhole shall be installed.

c. The access hole cast in the “flat-top” slab shall be located at the midpoint between the center of the slab and edge of the slab. (This shift off-center of the access hole is specified to allow the access hole to be cast nearer the manhole steps and still facilitate the use of the access hole for maintenance equipment.)

4. Manhole Frames and Covers

The manhole frame for the cover shall be set on top of the manhole cone at the required elevation. Where manholes are constructed in paved areas or fill slopes, the surface of the frame and cover shall be tilted so as to conform to the exact slope, crown and grade of the existing pavement or area adjacent thereto. Vertical adjustments to new and existing manhole frames and covers will be done exclusively with Cloud Concrete Grade Ring Part #24HMGRRG or approved equal. Existing loose/broken grade rings will be replaced and/or sealed as directed by the City so as to obtain a water tight seal from the top of the manhole riser cone to the bottom of the frame and cover. Sealing between a grade ring and the top of the manhole riser cone and the bottom of the manhole frame is to be done using Ram-Nek Joint Sealant Part #RN103 size ¾” or approved equal. In an instance where more than one grade ring is required they are also to be sealed with Ram-Nek Joint Sealant Part #RN103 size ¾”. A City inspector is required to witness all manhole adjustments.

5. Manhole Drop Pipe Assembly

Where the difference in invert elevations of an entering sewer and a discharging sewer, intercepting in the same manhole, is two (2) feet or more, a drop manhole assembly shall be constructed on the entering sewer in accordance with Paragraph 2.2-G.4 of this Section specifications and per details shown on the Contract Drawings.

6. Shallow Manholes

All material and methods used in the construction of shallow manholes, to the details shown on the Contract Document, shall conform to the applicable provisions for manhole construction set out in these specifications.

All costs of furnishing, constructing and installing manhole bases, fillets, sidewalls, casting and all other work necessary for a complete shallow manhole to the details as shown on the Contract Documents shall be included in the Contract unit price for shallow type manholes, and no separate payment will be allowed therefore.

7. Pipe Resilient Connectors to Manholes

All connections of pipe to manhole sidewall shall be made with resilient connectors. Openings in the manhole sidewall for the pipe shall be precast or cored to provide required size and location. The hole shall be manufactured to allow for lateral and vertical movement, as well as angular adjustments through 20 degrees. A resilient connector between the manhole and pipes such as Kor-N-Seal or A-Lok shall be installed in the precast or cored openings. Seals shall be installed in the precast or cored openings. The resilient connector shall meet the requirements set forth in ASTM C-923. The insulator ring provided by manhole supplier must be used to prevent mortar used for cosmetic dressing to set up inside resilient connector creating an adverse rigid connection. An external band made entirely of corrosion resistant stainless steel shall be used to affect the seal around the pipe. A torque wrench, as specified by the manhole supplier or approved equal, must be used to seat resilient connector to pipe.

As shown on the detail for resilient connectors, the void between the pipe and the connector shall be filled with an approved flexible gasket material.

Resilient connectors shall be considered an integral part of the manhole sidewall, and no separate payment will be allowed therefore.

8. Sealing

The sealing of the joints in the manhole sidewall and inverts of the manhole shall conform to the following specifications for waterproofing and sealing. Safety regulations and precautions set out by the paint manufacturer and OSHA shall be strictly observed.

All joints between sections of precast manhole sidewall shall be sealed with an approved flexible plastic gasket similar to Ram-Nek that shall be applied to

the joint surface prior to the placement of next manhole section. Sufficient gasket shall be used to fill the void in the joint.

9. Stubouts

Provisions for future sewers will be provided by installing a 24" long stubout to the size, line and grade indicated unless shown otherwise on the Plans. Such “stubouts” shall be the “bell” or “hub” end of a joint pipe, conforming to the requirements of the main sewer. The “bell” or “hub” shall be plugged with a disk stopper of the same material and sealed in place with the same joints as specified for the main sewer. All cost involved in placing the “stubouts” shall be included in the Contract unit price for manhole sidewall, and no separate cost will be allowed therefore.

10. Manhole Steps

Manhole steps shall be inserted and securely embedded in the manhole sidewall. Manhole steps shall be considered as an integral part of the manhole sidewall, and no separate payment will be allowed therefore.

11. Vent Pipe Assemblies

The vent pipe shall be located out of a travel way, in back of a curb or sidewalk, or as called for on the plans. Manhole cone to be precast for insertion of vent pipe or cone can be core drilled. Use Kor-N-Seal I & II Toggle Korband Connector for watertight fit.

The top of the vent pipe shall not be less than nine (9) feet above the existing ground line or set to the elevation as indicated on the Contract Drawings.

Concrete foundation for manhole vent pipe assemblies shall be Class “A” concrete as specified in these Specifications. Forms will not be required unless the foundation is located in backfill materials.

H. Concrete Encasement and/or Cradle

Concrete for concrete encasement and/or cradle shall be Class "CB" as specified herein and conforming to the requirements of P.C.A. Specifications for Plain and Reinforced Concrete.

All concrete shall be adequately protected from injurious action of the sun by keeping it wet, covering with water-saturated covering, or other methods satisfactory to the Engineer.

Concrete shall be mixed and placed only when the temperature is at forty degrees

(40°)F. or above and rising, unless specifically authorized by the Engineer, in which event all materials shall be heated in a manner approved by the Engineer. In freezing weather, suitable means shall be provided for maintaining the concrete at a temperature of at least fifty degrees (50°)F for a period not less than seventy-two (72) hours after placing, or until the concrete has hardened. Salt, chemicals, or other foreign materials shall not be mixed with the concrete for the purpose of preventing freezing, unless approved by the Engineer.

Concrete shall be placed before initial set has occurred and in no event after it has contained its water content for more than thirty (30) minutes.

All concrete shall be placed in the dry, upon clean, damp surfaces, free from water, and never upon soft mud or dry earth.

Freshly placed concrete shall be protected from wash by rain, flowing water, mud deposits and other injurious conditions.

Care shall be taken when placing concrete cradle and/or encasement that the sewer pipe is not moved from its proper grade and alignment.

Imperfect or damaged work, or any material damage before final acceptance, shall be satisfactorily replaced by the Contractor at his own expense. Removal and/or replacement of concrete work shall be done in a manner that will not impair its strength.

3.2 TESTING

A. General

It is the intent of these specifications to secure pipe lines with a minimum amount of leakage. All gravity pipelines shall be tested for infiltration; and, if designated in the Specifications, also for exfiltration.

B. Testing of Gravity Sewers

1. Visual Tests

Upon completion of the construction, or earlier if the Engineer deems advisable, the Engineer will make a visual inspection of the sewer and construction site. The Contractor shall immediately repair all leaks and defects found by such inspection.

In addition to general cleanup and leakage, the following standards shall be used to determine failure or defects of this project.

Sewers must be built so as to remain true to line and grade. The inclining grade of the bottom of the sewer after completion shall be such that after flooding the flood water will drain so that no remaining puddle of water will be deeper than

one-half (½) of an inch on pipe thirty-six (36) inches internal diameter or smaller, and three-quarters (3/4) of an inch on pipe larger than thirty-six (36) inches internal diameter. Any section of pipe that does not comply with the specifications at any time previous to final acceptance of the work shall be replaced or relaid at the Contractor's expense.

The Contractor will be held strictly responsible that all parts of the work shall bear the load of the backfill. If cracks one-hundredth (1/100) of an inch or larger develop in the reinforced concrete pipe within one year from the date of final acceptance of the work, the Contractor will be required to replace, at his expense, all such pipe defects.

2. Low Pressure Air Tests

A. Positive Pressure Test

Upon completion of construction, or earlier if the Engineer deems advisable, the Contractor will provide the necessary equipment and labor to perform low positive pressure air tests in accordance with the provisions of ASTM C 924 or ASTM C1103.

This test shall be performed in the presence of the Engineer and shall be performed on all types of gravity sewer pipe materials. This test shall also include the house sewer service to the cleanout assembly and service lines from manholes. It is imperative that plugs be installed and braced to prevent blowouts. A 6-psi pressure relief device must be used. No one will be allowed in or near the manholes during pressurization, testing, or depressurization.

B. Negative Pressure Test

Upon completion of construction, or earlier if the Engineer deems advisable, the Contractor will provide the necessary equipment and labor to perform low negative pressure air tests in accordance with the provisions of ASTM C-1214. This test shall be performed in the presence of the Engineer and shall be performed on all types of gravity sewer pipe materials. This test shall also include the house sewer services to the cleanout assembly and service lines from manholes. It is imperative that plugs be installed and braced to prevent blowouts. A 6 psi pressure relief device must be used. No one will be allowed in or near the manholes during pressurization, testing, or depressurization.

3. Infiltration Tests

Ground water above the pipe will reduce air loss. If the section of line under test shows significant infiltration, the Contractor, at no added compensation over the Contract price for the sewers, shall furnish, install and maintain a V-notch sharp crested weir in a wood frame tightly secured at the low end of each sewer lateral and at locations on the main sewers directed by the Engineer. The joints shall

be tight, and visible leakage in the joints or leakage in excess of that specified above shall be repaired at the Contractor's expense by any means found to be necessary. Infiltration testing procedures shall follow ASTM C-969 except that maximum allowable infiltration shall be 25 gallons per mile per inch of diameter of sewer per 24-hour day at any time.

When infiltration is demonstrated to be within the allowable limits, the Contractor shall remove such weirs.

Infiltration tests may be required for the complete line or any portion thereof. Failure of any part of the line to pass an infiltration test shall be sufficient reason to require additional work by the Contractor to reduce the amount of infiltration in such portion of the line tested.

The passing of an infiltration test shall in no way relieve the Contractor of any responsibility to repair visible leaks found during the visual inspection.

4. Internal TV Inspection and/or Smoke Testing

The Contractor is required to conduct an Internal T.V. Inspection using CCTV Unit. The CCTV used must record and display on screen the footage from the center of the manhole it is filming from. The direction the CCTV Unit must use is from upstream to downstream manhole (with the flow, NOT AGAINST) unless otherwise permitted by the City Engineer or his representative. The recorded Internal T.V. Inspection video will be provided to the City Engineer as VHS videotape or in electronic format burnt to a compact disc or digital videodisc. A TV log must be recorded with all pertinent information i.e. day, time, pipe diameter, service locations, blockages, deformed pipe, ect. The contractor may also perform smoke tests as requested by the City Engineer or his representative. No additional cost to the City of Goodlettsville shall be charged by the contractor for either smoke testing or TV inspections Furthermore, the Contractor will be responsible for correcting all deficiencies discovered by these tests at no additional cost to the City of Goodlettsville. TV Inspection Work (CCTV) will be done once all gravity sewer lines have passed the air pressure and mandrel pull tests and all manholes have passed the vacuum test.

5. Deflection Tests

No pipe will be accepted that has deflected more than 5%. All polyvinyl chloride (PVC) sewer pipe shall pass a go/no-go, mandrel inspection sized as shown in the table below. The test shall be conducted after the pipe is in place and not less than thirty (30) days after the pipe has been completely backfilled. To insure accurate testing, the sewer lines shall be thoroughly cleaned before testing. Any section that fails to pass shall be repaired by rebedding or replacement of the pipe and retested to satisfaction of the Engineer. The mandrel will be provided by the Owner or the Contractor may provide a mandrel approved by the Engineer. The mandrel shall be pulled by hand freely through the sewer pipe

from manhole to manhole.

PVC Pipe Nominal Size Inches	Mandrel Size Inches
8	7.6
10	9.5
12	11.4
16	14.25

C. Testing of Ductile Iron Gravity and/or Pressure Line Sewers

1. Ductile Gravity Sewers
   Testing of ductile iron gravity sewers shall be in accordance with paragraph 3.2-B-1, 2, 3 of this Section of these Specifications except that the allowable infiltration and exfiltration shall not exceed 10 gallons per mile per inch of diameter of sewer per 24-hour day at any time.

2. Ductile Iron or Polyvinyl Chloride Pressure Line Sewers
   When a stretch of pipe and appurtenances has been completed, the Contractor shall furnish proper appliances and facilities for testing and draining the same without injury to the work or surrounding territory. He shall test by filling the pipe with clean water under the minimum hydrostatic test pressure designated in the specifications. The test pressure shall not be less than 150 psi. No pipe installation will be accepted until the leakage is less than 11.65 gallons per day, per mile, per inch nominal diameter at a pressure of 150 psi. The duration of the test shall be at least 2 hours. The hydrostatic testing shall be performed in accordance with Section 4 of AWWA C-600. The allowable leakage for various diameter pipes at the specified test pressure shall meet the requirements of Table 6 of AWWA C-600. Water for making tests shall be furnished by the Contractor at his expense.

D. Testing of Six-Inch (6") House Sewer Services
   All service connections and service lines shall be included in and must satisfy all tests specified to be performed in paragraph 3.2-B of this Section of these Specifications.

E. Manhole Vacuum Test
   It will be required that all manholes be subjected to a vacuum test of at least 10" Hg. prior to acceptance by this Department. The test shall be conducted to include the manhole casting (frame) and will be considered acceptable if the vacuum remains at 10" Hg. or drops to no less than 9" Hg. within one (1) minute. If the manhole fails the initial test, the Contractor shall locate the leak and make appropriate repairs, acceptable to the Engineer, in preparation for additional tests.

   It is also called to the Contractor's attention that he will be required to furnish all equipment necessary for this test including the manhole sealing apparatus, gauges, pump, plugs and operating personnel.

The cost of this work shall be merged into the unit price bid for manholes, and no additional payment will be allowed.

3.3 MAINTENANCE

Immediately upon completion of each individual sewer line or a 1,500' segment of this sewer line constructed under this Contract, the Contractor shall begin and prosecute to completion the cleanup and property restoration for this particular line. This shall be done prior to the start of another line, unless a written permission is obtained from the Owner and/or Engineer to begin another line. This permission will only be given if the following conditions and situations exists:

The Contractors maintain a sufficient cleanup crew on the project at all times, weather permitting, and that the progress shall be at least equal to the pipe laying progress on the project. The cleanup must be maintained not more than one line or 1,500 feet, whichever is least, behind the pipe laying crew. This shall be subject to weather and ground conditions.

Conditions permitting, property cleanup and restoration shall begin and be prosecuted to completion on a timely basis as set forth herein. Failure by the Contractor to prosecute and complete property cleanup and restoration on a timely basis will result in the withholding of 15% of the payment due for that part of the completed pipe sewer for which cleanup and property restoration has not been accomplished. This 15% withholding constitutes payment for work not completed. This amount shall be in addition to the retained percentage for work completed. This withholding of 15% will continue on subsequent payment estimates until such time as cleanup and property restoration is in compliance.

Cleanup and restoration of areas and facilities disturbed by construction operations shall be considered an integral part of the excavation work, and no separate payment will be allowed therefore except as herein specified.

3.4 Warranty

1. All Sanitary Sewers and Appurtenances, including Pump Stations, are to be warranted for one (1) year. At the eleventh (11th) month all Sanitary Sewers and Appurtenances, including Pump Stations are to be reinspected to insure there are no outstanding problems or issues that have not been resolved.

END OF SECTION

SECTION 03300

CONCRETE

PART 1 GENERAL

1.1 SUMMARY

A. The work under this heading shall include plain concrete for pipe blocking and encasement, vaults and manholes, and slabs on grade.

B. The work shall include all necessary protection and curing of the concrete work immediately following the finishing thereof and for as long a period as may be deemed necessary by the Engineer for the proper protection of finished surfaces.

C. The work shall include all field Engineering required for the work of this section and the design and preliminary testing of the controlled concrete mixes.

1.2 GENERAL REQUIREMENTS

A. The Contractor shall examine the drawings and specifications for this portion of the work, and for other work affecting his own, and shall report to the Engineer for adjustment of any discrepancies found to exist. He shall check shop drawings to see that they conform to his work and assist other craftsmen in their work.

B. The Engineer's drawings and schedules show the typical dimensions and form of concrete work and sizes. These drawings show the general design and extent of the concrete work, which shall be installed to meet conditions as intended. The drawings are not intended to serve as shop drawings, nor to show every item in detail.

C. The Contractor shall have in charge of the work, at all times during construction, a competent superintendent, with experience in this type of construction work. Under the superintendent there shall be one or more foremen in charge of placing and curing concrete.

D. The Contractor shall lay out all concrete work, and establish correct levels therefore, and be responsible for the accuracy of same. He shall at all times be responsible for the safety of the concrete work. He shall see to it that at no time is the concrete structure subject to loading or overloading, with materials, and apparatus by others, or by his own operations.

1.3 SUBMITTALS

A. All cement specified is to be mill tested, copies of tests to be furnished to the Engineer. If other tests of cement are required, they will be made as ordered and in such manner as directed by the Engineer, the cost of which will be borne by the

Owner. Such tests shall be made by a laboratory approved by the Engineer and reports of all tests shall be made to the Engineer.

B. The Contractor shall submit to the Engineer, shop drawings showing details of concrete reinforcing steel, bending details, and other items necessary to proper installation of materials into the completed work.

PART 2 PRODUCTS

2.1 CONCRETE

A. Concrete for this project will be ready mix. It shall comply with these specifications or with the "Specifications for Ready Mixed Concrete" ASTM Designation C94 for the strengths specified herein for Class A, Class B and Class C concrete.

2.2 PROPORTIONS FOR CONCRETE

A. Concrete shall be composed of fine aggregate, course aggregate, Portland cement, admixture and water. The Contractor shall have available all equipment necessary to positively determine and control the actual amounts of all materials entering into the concrete, and shall provide sieves for analysis of aggregates. He shall have the supplier make sieve analysis of aggregates and demonstrate method of weighing aggregates as often as the Engineer requests same, in order to determine that the concrete is in accordance with the requirements of the specifications.

B. The mix shall be designed to secure concrete having the following minimum compressive strength at the age of 7, and 28 days as determined by breaking test specimens in accordance with procedure set forth in the ASTM Designation C39 except where otherwise specified.

Class of Concrete	"A"	"B"	"C"	
Gals. Water per sack of cement	5.0	5.5	8.0	
Min.bags cement per cubic yard of concrete	6.5	5.75	4.5	
Min.28 day strength 1 cylinder lbs. per sq. inch				
				3800
			2800	1800
Min.28 day strength average for 5 cylinders lbs. per sq. inch				
				4500
			3500	2000
Slump in inches	1-4	2-4	1-4	

Suitable means shall be provided for controlling and accurately measuring the

water. Free water or moisture carried by aggregates shall be included as part of the mixing water.

C. The strengths and slumps shall be specified. The concrete mixture shall be so designed that the materials will not segregate and excessive bleeding will not occur.

D. At the outset of the work full size or trial batches shall be run to determine the most desirable combination of aggregates to secure the desired results. Proportioning of aggregates shall be carefully done by scales or by containers of known capacity and the effect of contained moisture as to bulking and weight must be compensated for. When the proper combination of aggregates has been established, care shall be exercised to proportion accordingly so long as the aggregate supply remains constant. Should the type of aggregate available be changed, new proportioning standards shall be established by trial before continuing the operations.

E. The above proportions are based on the use of gravel for course aggregate. If other course aggregate is used, proportions will be adjusted accordingly. All materials shall be measured by weight except the water and cement may be measured by volume when so authorized by the Engineer. One standard bag of Portland Cement will be considered as 94 pounds in weight, and one gallon of water as 8.33 pounds.

F. The proportions in all mixture, to meet the essential requirements, must be such that the sand and cement form a rich, strong mortar, sufficient to thoroughly bond in the course aggregate making it inert in the mass when set.

2.3 WATER CONTENT

A. The amount of water to be used in mixing concrete shall at all times be the minimum amount necessary to produce a plastic mixture of the strength specified, of the desired density, uniformity and workability.

In general, the consistency of any load of concrete shall be that required for the specified placing conditions and method of placement; from 2 inches to 4 inches for concrete poured directly into the trench, when such slump tests are made in accordance with the ASTM requirements therefore.

B. The matter of regulating the water content in concrete is of importance to the job from the standpoint of placing same to obtain the greatest density and to secure the necessary strength. The Contractor shall see that this detail is properly supervised. Where the desired results are not being obtained, the Engineer may direct changes in the water control.

2.4 REINFORCING STEEL

A. Reinforcing steel shall have minimum yield strength of 60,000 psi with a nominal

allowable stress of 24,000 psi. No foreign steel will be allowed. Steel shall be free of rust and corrosion.

PART 3 EXECUTION

3.1 PLACING CONCRETE

All concrete shall be adequately protected from injurious action of the sun by keeping it wet, covering with water-saturated covering, or other methods satisfactory to the Engineer.

Concrete shall be mixed and placed only when the temperature is at forty degrees (40°) F. or above and rising, unless specifically authorized by the Engineer, in which event all materials shall be heated in a manner approved by the Engineer. In freezing weather, suitable means shall be provided for maintaining the concrete at a temperature of at least fifty degrees (50°) F. for a period not less than seventy-two (72) hours after placing, or until the concrete has hardened. Salt, chemicals, or other foreign materials shall not be mixed with the concrete for the purpose of preventing freezing, unless approved by the Engineer.

Concrete shall be placed before initial set has occurred and in no event after it has contained its water content for more than thirty (30) minutes.

All concrete shall be placed in the dry, upon clean, damp surfaces, free from water, and never upon soft mud or dry earth.

Freshly placed concrete shall be protected from wash by rain, flowing water, mud deposits and other injurious conditions.

Care shall be taken when placing concrete cradle and/or encasement around pipe that the pipe in not moved from its proper grade and alignment.

Imperfect or damaged work, or any material damage before final acceptance, shall be satisfactorily replaced by the Contractor at his own expense. Removal and/or replacement of concrete work shall be done in a manner that will not impair its strength.

3.2 SOIL AND WATER CONDITIONS

A. Under no circumstances shall any footings for piers, columns, foundations, or bearing walls be started on soft or filled ground. Soil shall be moist; but not muddy, at time of placing concrete. Contractor shall secure the Engineer's approval of the soil condition for all footings before they are poured.

B. Concrete shall not be poured on frozen earth or trench bottoms. Temporary coverings of tarpaulins, or otherwise, shall be installed over excavations made during weather in which temperatures are below freezing in order to keep frost out

of the excavation or subgrade. Should the bottom of excavations be frozen prior to pouring concrete, the same shall be excavated to remove frozen material.

C. Excavations for concrete construction below grade shall be protected from surface water entering same by banking the spoil around or alongside the excavation made. Subsurface water entering the excavation shall be removed by pumping and bailing. No concrete shall be placed under water at any time, nor shall water be permitted to flow through or over freshly placed concrete.

3.3 STORAGE OF MATERIALS

A. There should be no need for storage of concrete materials where all concrete will be ready mixed.

B. Reinforcing steel shall be laid out systematically in accordance with the identification tags thereon in the order required for the construction and protected. Heavy timbers shall be laid at intervals for support of the steel and to keep same off the ground. No heavy materials shall be piled or laid upon reinforcement to bend or deform its shape in any way. The Contractor shall assign a space on the site of ample size and accessible to the work for storage, handling, assorting, etc., of the steel and the space shall be maintained in a neat and orderly manner.

3.4 WORK IN COLD AND HOT WEATHER

A. Concrete work done in cold or freezing weather shall be protected by steam coils or dutch-ovens for uniformly heating the aggregates before same are mixed, by heating the mixing water, and by heat applied to the concrete mixture after placing. No frosty or frozen aggregates shall be used at any time. The use of salt, chemicals, or so-called anti-freezing compounds in the concrete is prohibited.

B. Concrete shall not be placed during or immediately after protracted periods of freezing weather, unless special precautions are taken to free all materials to be used from frost and ice, and to prevent freshly placed concrete from freezing before it has sufficiently hardened. The temperature of the concrete shall be maintained not below fifty degrees (50°) F. for a period of 72 hours after same is placed.

C. Concrete placed below grade shall be protected from formation of ice thereon for a period of 30 days after placing.

D. Contractor shall provide all equipment and fuel needed for any heating that may be required as well as the necessary labor and watchmen to attend fires and insure proper heating at all times, both day and night. The Contractor shall keep himself informed as to weather predictions and endeavor to plan his pouring operations so as to avoid the necessity of cold weather precautions insofar as possible.

E. In hot weather, concrete must be kept wet until thoroughly set. During extremely hot weather the course aggregate shall be sprayed frequently to utilize the cooling

effect of evaporation and the coolest water available used for mixing.

3.5 INSPECTION

A. No concrete shall be placed until area for placement, including the steel tied in place, has been inspected and approved by the Engineer. The work shall be open at all times for inspection by the public authorities and the Owner. Ways and means shall be provided by the Contractor at all times for access to all parts of the work for inspection by the Engineer and others in authority, such provision to be safe and secure as necessary and demanded.

3.6 PLACING REINFORCEMENT

A. Metal reinforcement before placing shall be thoroughly cleaned of mill scale, rust and coatings that would destroy or reduce the bond. Bars shall be of the required size, fabricated to the required shape and form.

B. The Contractor shall receive reinforcement on the job and lay out bars according to identification in good order to expedite location for placing in permanent position. Reinforcement bars or members shall have identification tags attached, corresponding to marks or numbers designated for same on the approved shop drawings. Reinforcement shall be stored and supported above grade in a horizontal position in such manner that the shape is not distorted. In no case shall reinforcement be stored directly in contact with the ground surface.

C. The workmen responsible for placing the reinforcement shall be supplied with adequate copies of the drawings and bar lists. Heating of reinforcement for bending on the job will not be permitted. Openings framed out of concrete slabs and walls shall be properly reinforced, and dowels and keyways provided so as not to weaken the construction.

D. Metal reinforcement shall be accurately positioned and secured against displacement by using tie wires of annealed wire not less than No. 16 gauge, or suitable clips at all intersections, and shall be supported in a manner that will keep all metal away from the exposed surfaces of the walls or members.

E. The minimum clear distance between any bar and the weather side of all exterior concrete shall be 2 inches. Not less than 1/2 inch coverage shall be provided for bars in concrete footings and wall footings.

F. The placing of reinforcement shall be carefully done, bars accurately spaced and held in required position by tie wires and chair supports. Whenever concrete is being poured, a workman shall be on hand to see that the reinforcing steel is not displaced during the operation, and to hook the reinforcement up into its required position.

3.7 CONSTRUCTION JOINTS

A. Construction joints shall be horizontal or vertical and keyways installed as shown on the drawings or as directed by the Engineer. Joints not indicated on the drawings shall be so made and located as to least impair the strength and appearance of the structure. Where a horizontal joint is to be made, any excess water and laitance shall be removed from the surface after concrete is deposited. Before depositing of concrete is resumed, the hardened surface shall be cleared and roughened, all weak concrete removed, and the joint grouted with neat cement and water.

END OF SECTION

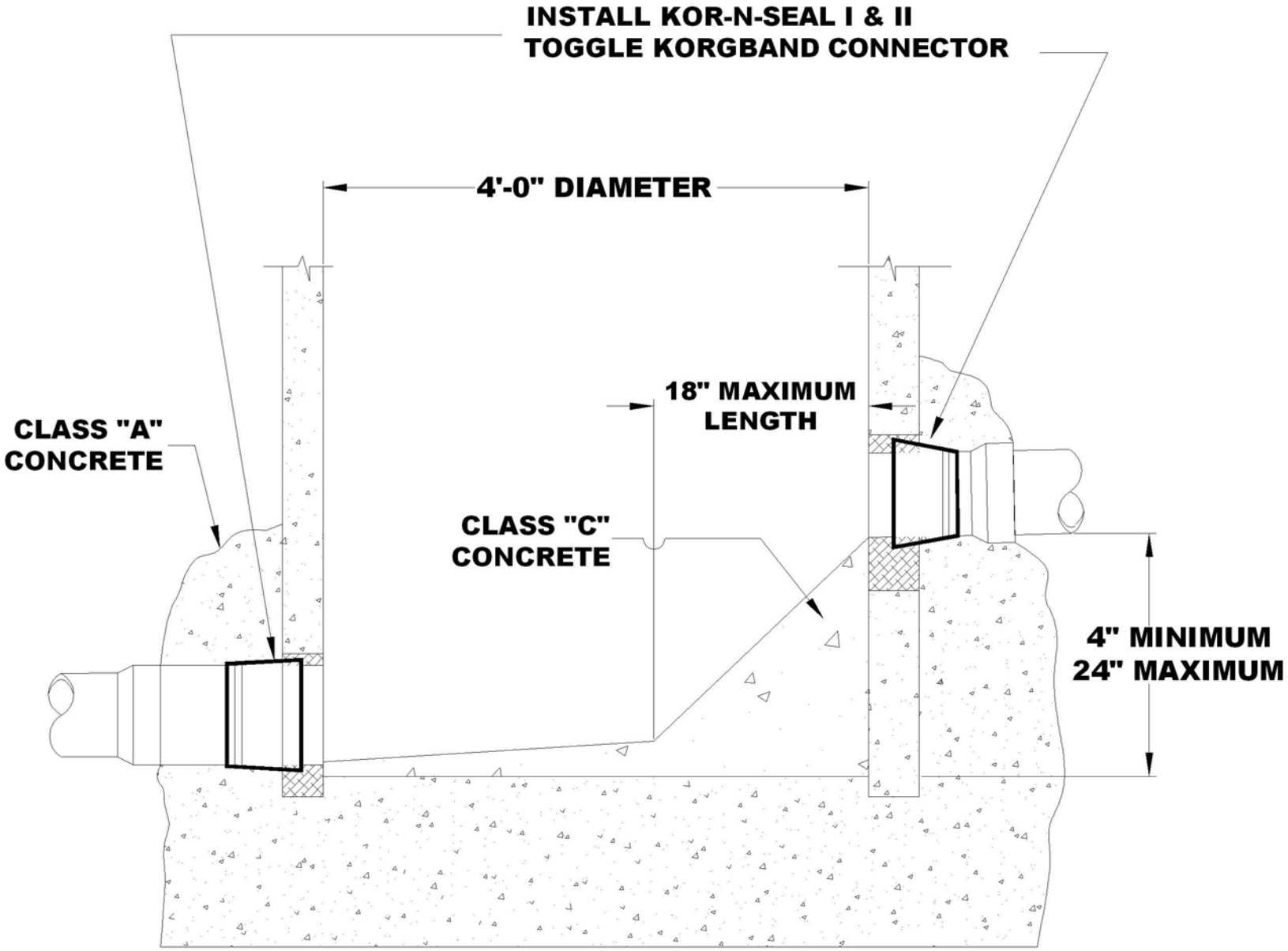

4" TO 24" DROP STRUCTURE INVERT DETAIL

NOTE: SEE STANDARD PRECAST MANHOLE FOR TYPICAL DEMENSIONS.

EASEMENT Cleanout LID

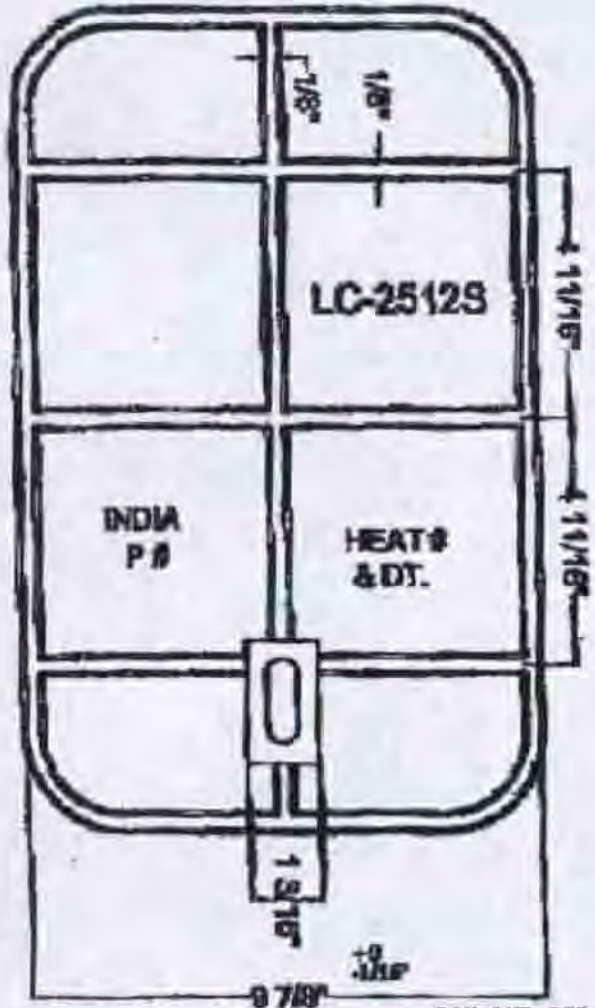

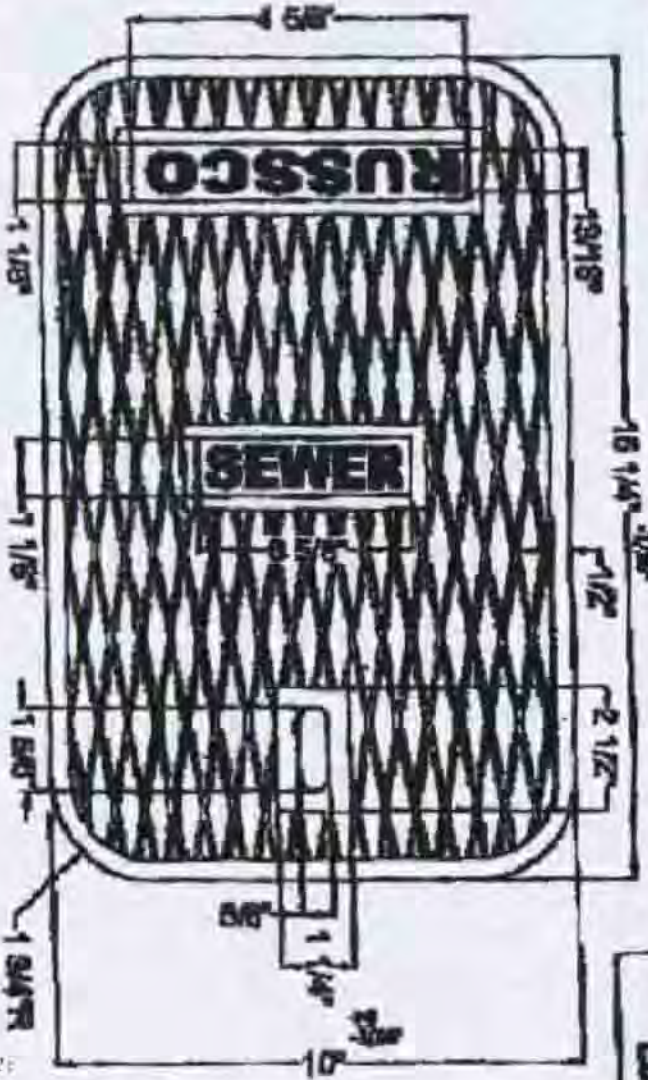

BOX AND LID CAN BE PURCHASED AT:
NATIONAL WATERWORKS
120 FERNCO DR.
NASHVILLE, TN 37207
615-226-9632 OFFICE
615-227-8676 FAX
MANGER: CHARLIE NORMAN 4/11/07

SIGMA CORPORATION

LC-2512S

DRAWN BY: RAMANTA BAIL.
CHECKED BY: ASHIS DEY.
WEIGHT: 17 LBS.
DESCRIPTION: C.I. "RUSSCO" TELEMETER LID ONLY

Mid-States Plastics, Inc.

Customer Service: KY 800-444-7615 TX 800-521-6554
Fax: KY 859-498-7919 TX 936-760-1357
Web: www.msmeterboxes.com Email: productinfo@msmeterboxes.com

MSBC Series Meter Boxes

EASEMENT Cleanout BOX

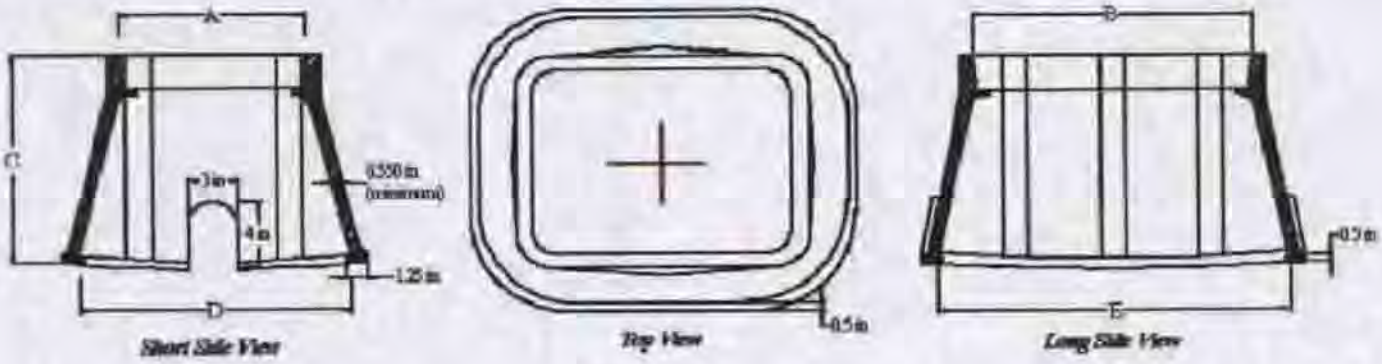

Part Number	A	B	C	D	E	Weight
MSBC1015-12	10.25"	15.5"	12"	15.5"	20.75"	13 lbs
MSBC1015-18	10.25"	15.5"	18"	15.5"	20.75"	20 lbs
MSBC1015-24	10.25"	15.5"	24"	15.5"	20.75"	26 lbs
MSBC1118-12	11.25"	18.125"	12"	16.75"	23.125"	18 lbs
MSBC1118-26	11.25"	18.125"	26"	16.75"	23.125"	30 lbs
MSBC1416-12	14.5"	16.5"	12"	17"	17.5"	14 lbs
MSBC1324-12	13.75"	23.1875"	12"	19"	27.625"	25 lbs
MSBC1730-18	17.625"	30.5"	18"	22.875	35"	40 lbs

All dimensions and weights are nominal and subject to change without notice

Typical Specification:

The meter box shall be high-density Polyethylene of one-piece molded construction for durability and impact strength with dimensions as shown in the referenced drawing. The meter box must have a minimum wall thickness of .550" and have been tested to withstand a 15,000 lb. vertical load freestanding and a 200lb side load, applied with a 4"x4" plate 1" down for the top center of the box, without deflecting more than 1". All edges shall be clean and smooth for safety during handling and installation. Inner and outer walls are to be smooth with a bright white interior to ease meter reading with a black exterior to retard UV degradation. The meter box shall an anti-settling flange on the bottom for stability and pre-molded pipe entry areas on each end. The box shall weigh no more than listed weight for each meter size for safety and ease of handling, transport and installation. The meter box shall be MSBC style as manufactured by Mid-States Plastics Inc. or equal.

© Mid-States Plastics, Inc. ♦ 280 Midland Trail, Mt. Sterling, KY 40353 ♦ 101 East Ave M, Conroe, TX 77301 0203

TRAFFIC BEARING Cleanout BOX

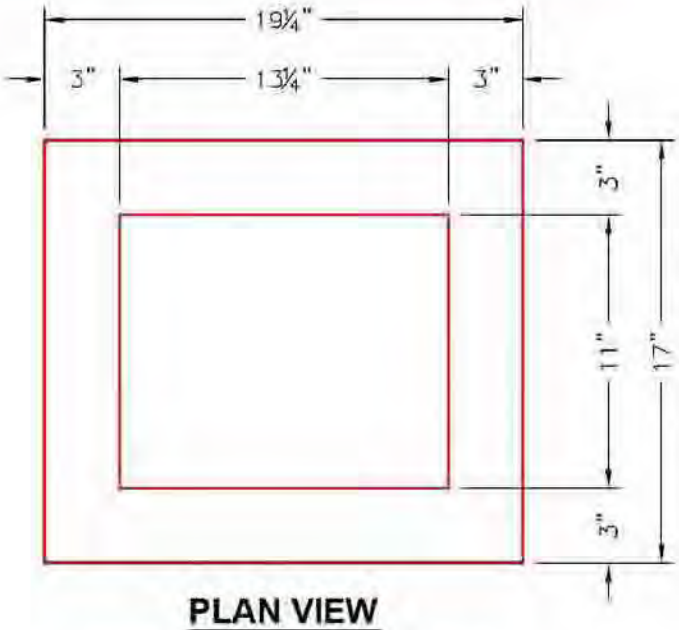

PLAN VIEW

Concrete: 4500 psi @ 28 Days

Weights:

2" GR – 32 Lbs.
4" GR – 63 Lbs.
6" GR – 95 Lbs.
12" Box – 189 Lbs.
18" Box – 283 Lbs.

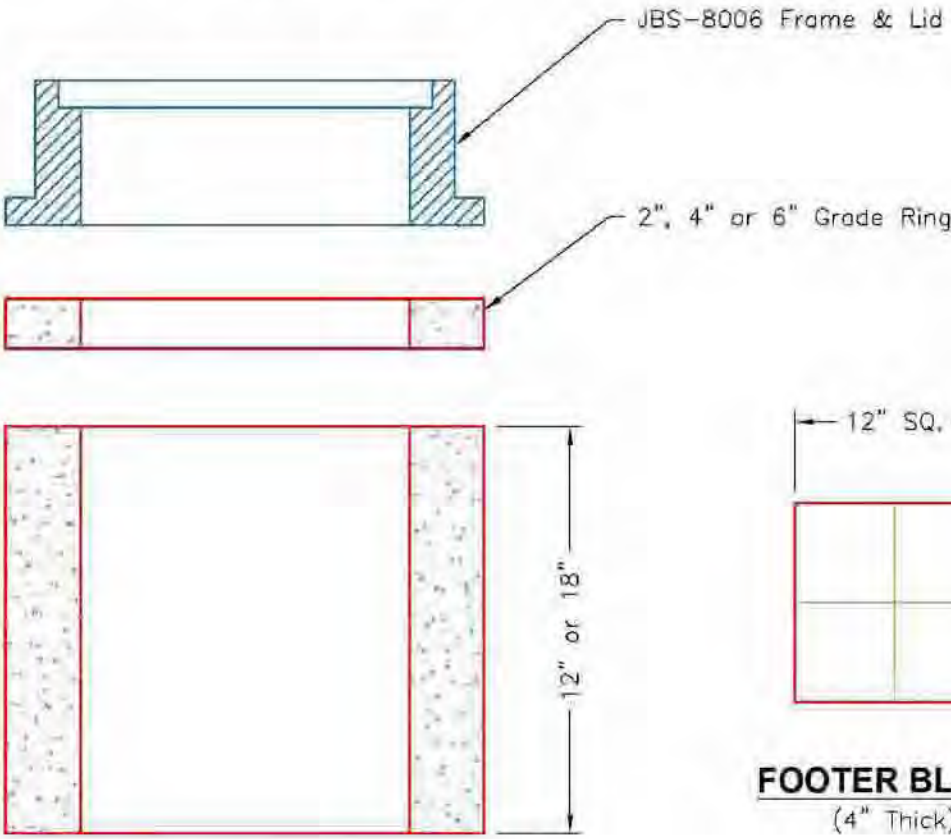

SECTION VIEW

FOOTER BLOCK
(4" Thick)

SCALE: 1 1/2" = 1'-0"

Oldcastle Precast®
Cloud Concrete Products
125 International Blvd., LaVergne, TN 37086
Phone: 615-793-1920 Fax: 615-793-9625

VALVE

FILE NAME: 382UWMVALVE_DET.DWG
ISSUE DATE: January 2002
www.oldcastleprecast.com

Valve Box

Part # UT-045

Copyright © 2002 Oldcastle Precast, Inc.

Traffic Bearing Cleanout Frame & Cover

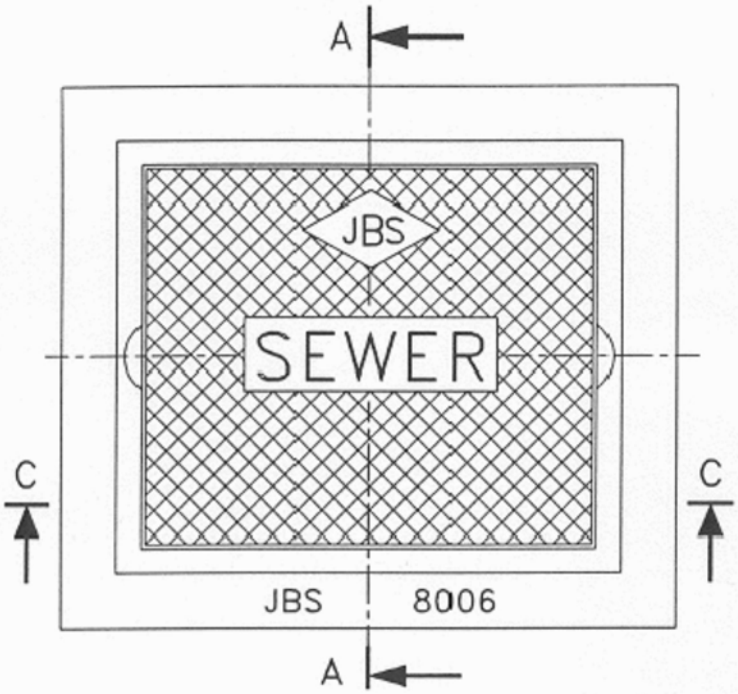

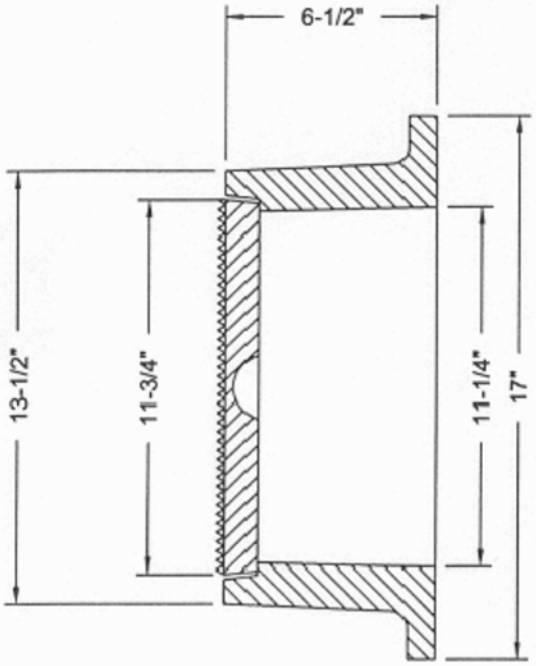

SECTION A – A

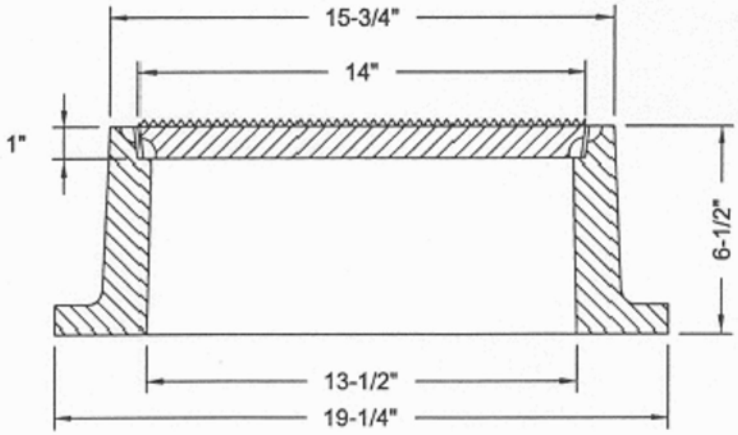

SECTION C – C

METRO STANDARD
TRAFFIC DUTY

John Bouchard & Sons Co.
1024 Harrison Street, Nashville, TN 37203
Tel: 615-256-0112 Fax: 615-327-2427

8006 FRAME & COVER

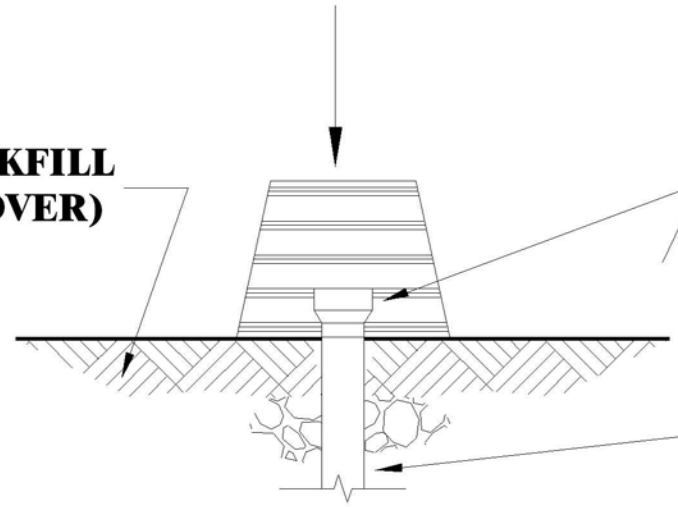

NOTES:

1. ALL FITTINGS AND LINES TO BE P.V.C. SOLVENT WELD (STANDARD DIMENSION RATION 35)
2. WHEN SERVICE LINE FROM MAIN LINE IS 4", ALL FITTINGS AND LINES TO BE 4" (SCHEDULE 40).

CLEANOUT

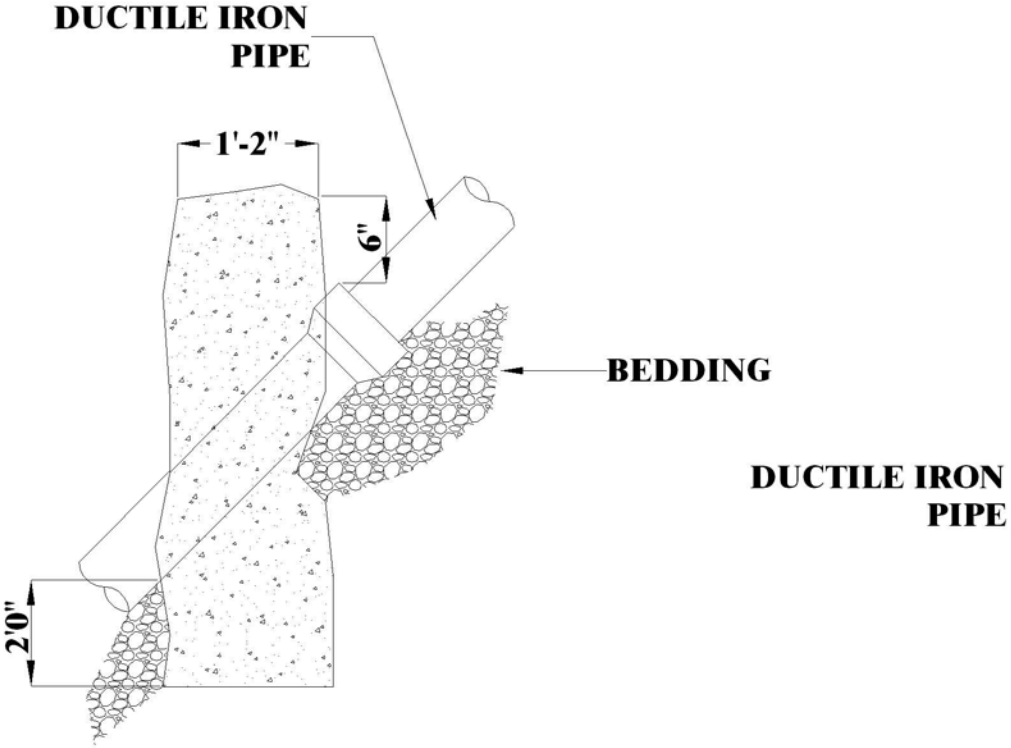

SECTIONAL VIEW

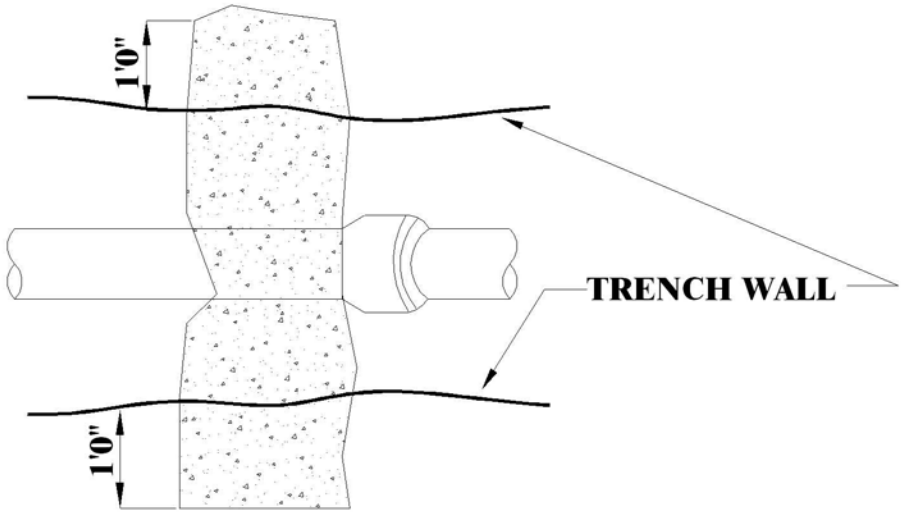

PLAN VIEW

DUCTILE IRON
PIPE

COLLAR DETAIL

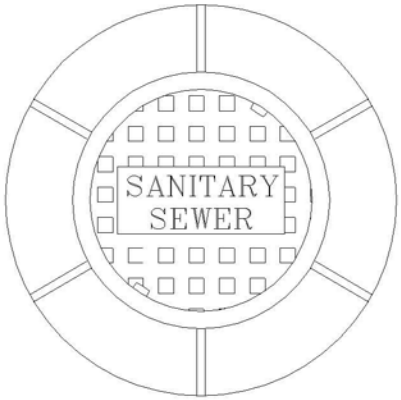

TRAFFIC:
JOHN BOUCHARD & SONS #1150

PLAN

APPROXIMATE FRAME & COVER WEIGHT: 415 LBS.
TRAFFIC (JOHN BOUCHARD & SONS)

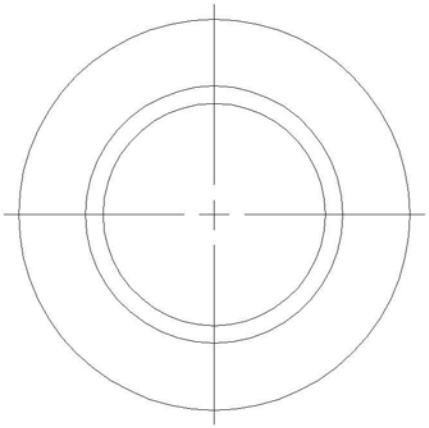

PLAN

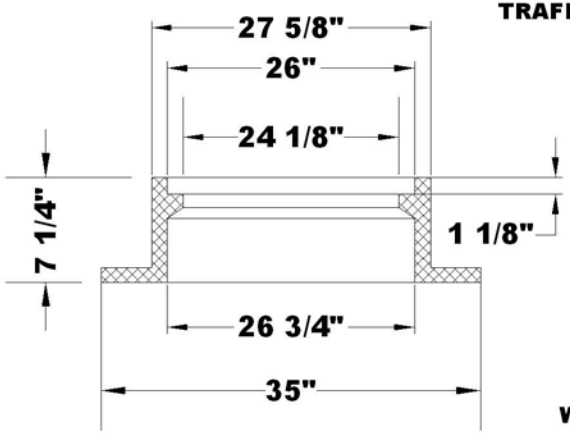

FRAME

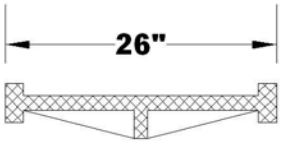

COVER

STANDARD TYPE

WATERTIGHT:
JOHN BOUCHARD & SONS #1123

APPROXIMATE FRAME & COVER WEIGHT: 535 LBS.

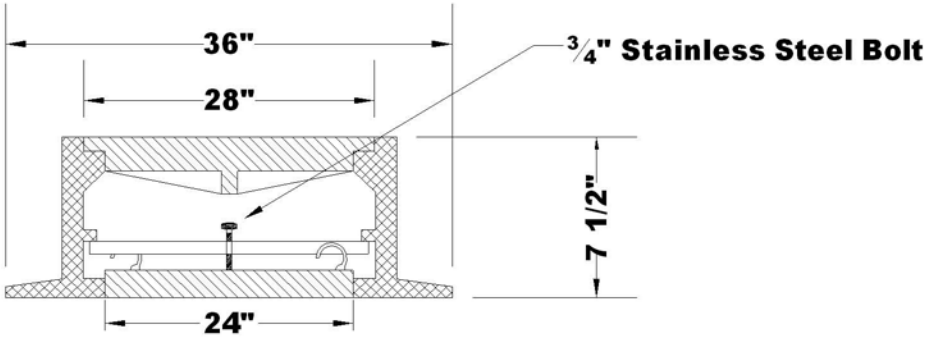

FRAME & COVER

WATERTIGHT TYPE

MANHOLE FRAMES AND COVERS

NOT TO SCALE

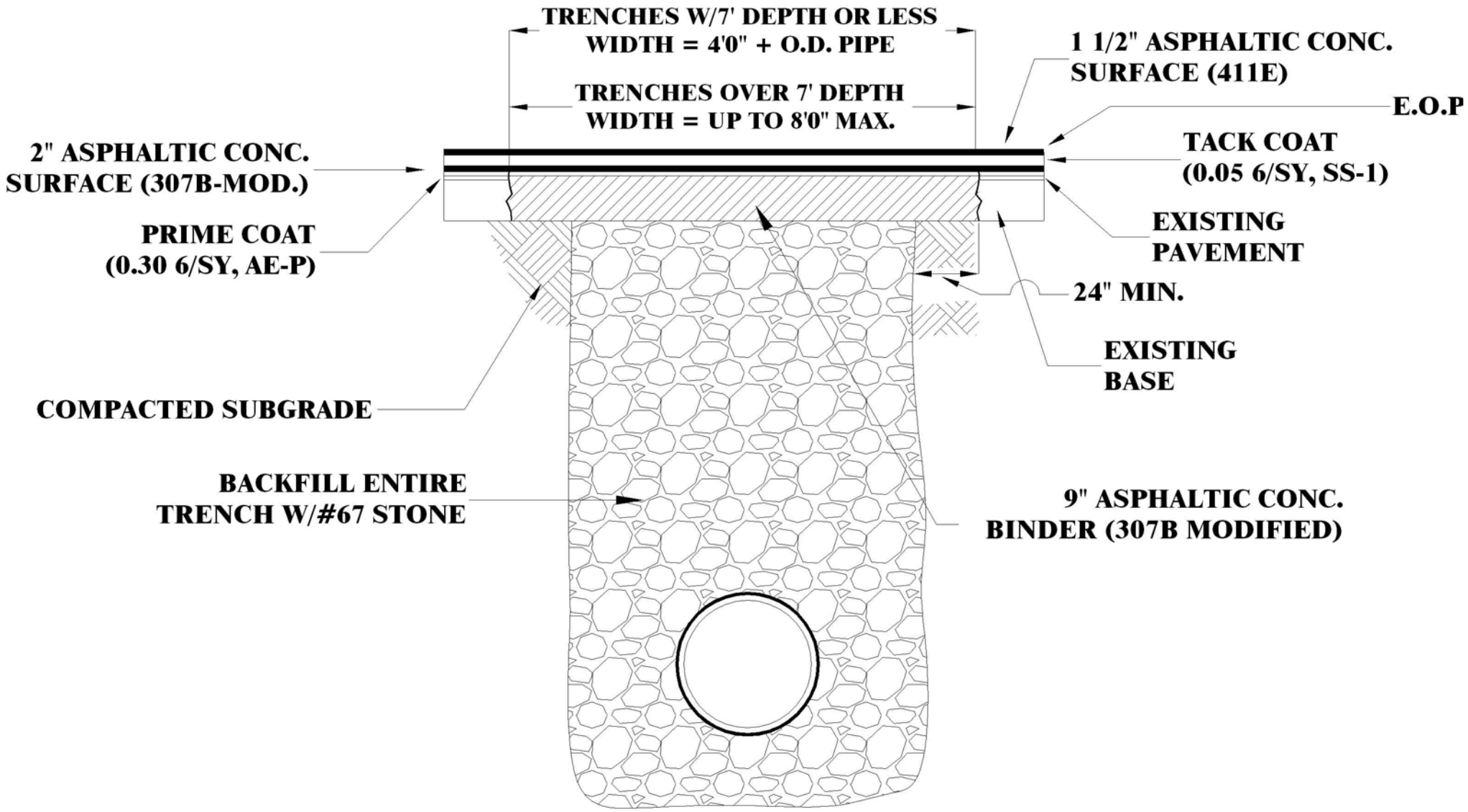

FULL WIDTH PAVEMENT REPLACEMENT

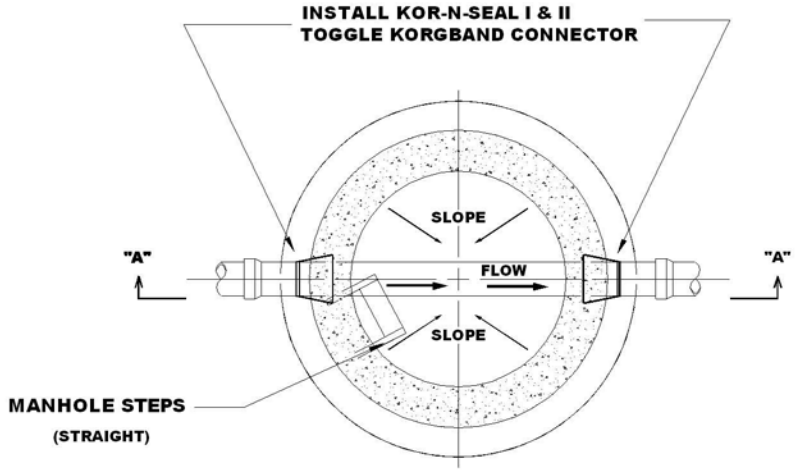

PLAN VIEW

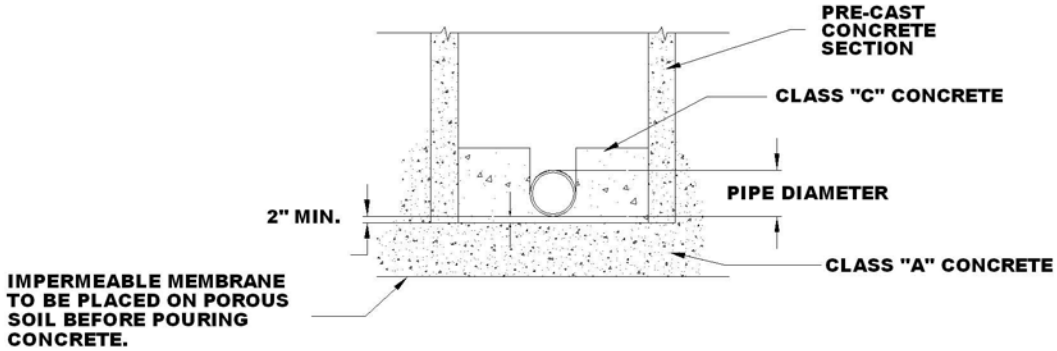

ELEVATION SECTION "B-B"

NOTE: CONCRETE WILL BE READY MIX AND SHALL COMPLY WITH THE SPECIFICATIONS ASTM DESIGNATION 94 FOR THE CLASSES A, B, AND C AS OUTLINED IN THE STANDARD SPECS.

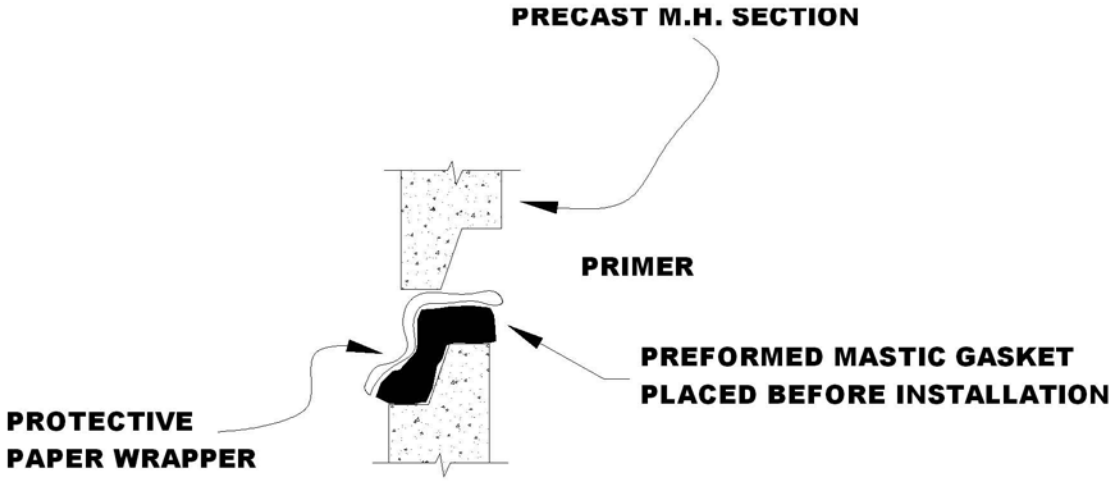

OPEN JOINT

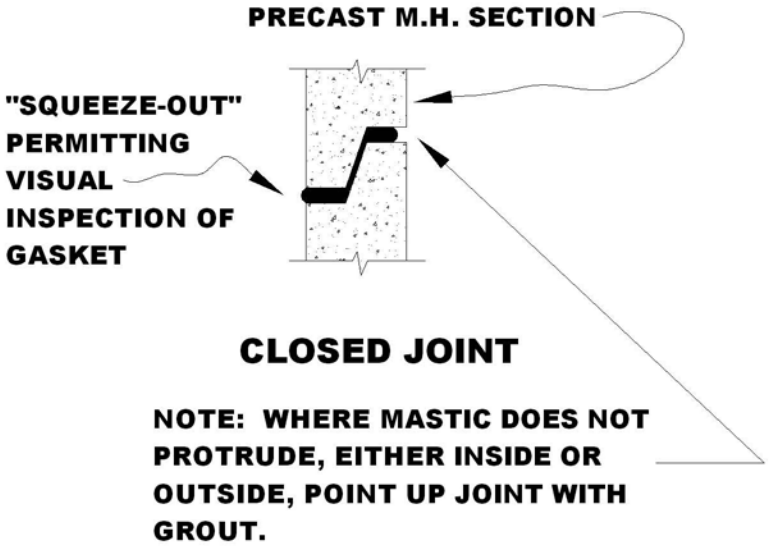

CLOSED JOINT

DETAILS OF MASTIC GASKET FOR PRECAST MANHOLE SECTIONS

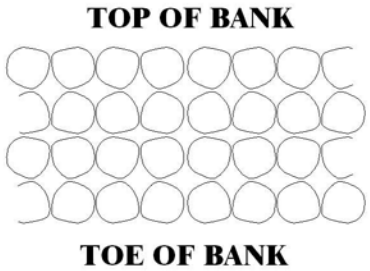

PLAN VIEW

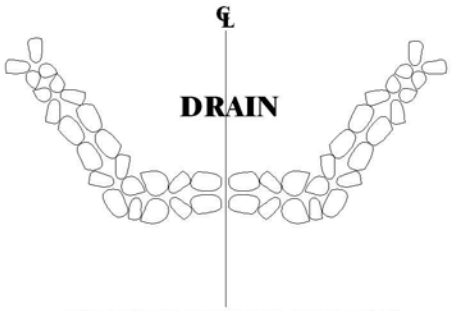

SECTIONAL VIEW

NOTE: FACE OF RIP-RAP IS TO BE FLUSH WITH SIDES AND BOTTOM OF DRAIN

RIP-RAP STABILIZATION WHERE NOTED WILL CONSIST OF HAND-PLACED NATIVE LIMESTONE, HAVING A MAXIMUM LENGTH/WIDTH DIMENSION OF 12" IN EITHER DIRECTION AND A MAXIMUM THICKNESS OF 6". TREATMENT WILL BE PLACED IN TWO INTERLOCKING (NESTING) LAYERS. RIP-RAP SHALL BE PLACED FOR THE FULL WIDTH OF AREA DISTURBED BY PIPE LAYING OPERATIONS. LIMIT OF WIDTH FOR PAYMENT OF RIP-RAP SHALL BE AS FOLLOWS:

PIPE DIAMETER	RIP-RAP WIDTH
8"	5'
10"	5.5'
12"	6'
15"-16"	8'
18"	8.5'
21"	9'
24"	10'

RIP-RAP DETAIL

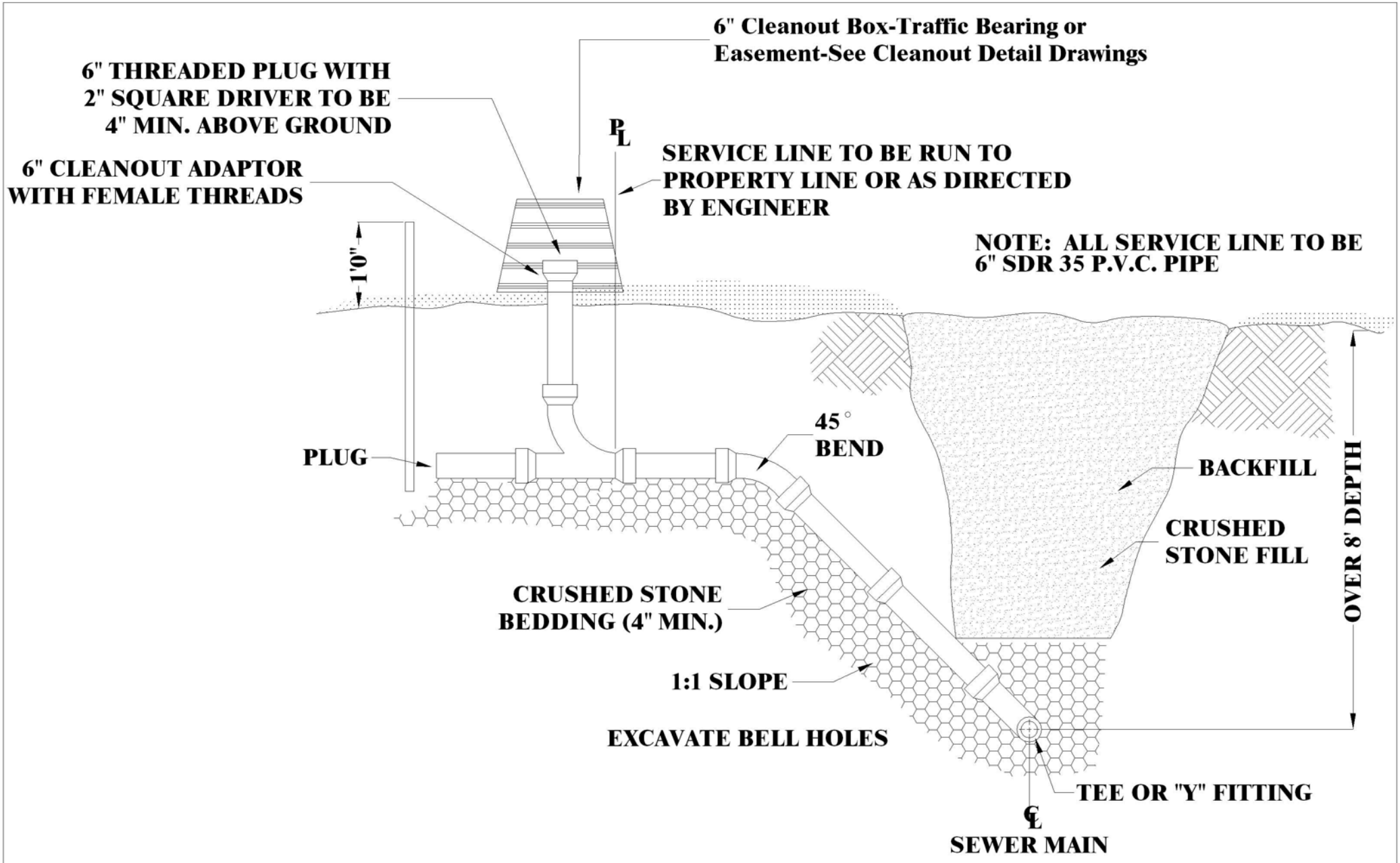

SERVICE LINE DETAIL FOR DEEP TRENCHES

(ONLY WHEN CALLED FOR ON PLANS OR DIRECTED BY CITY ENGINEER)

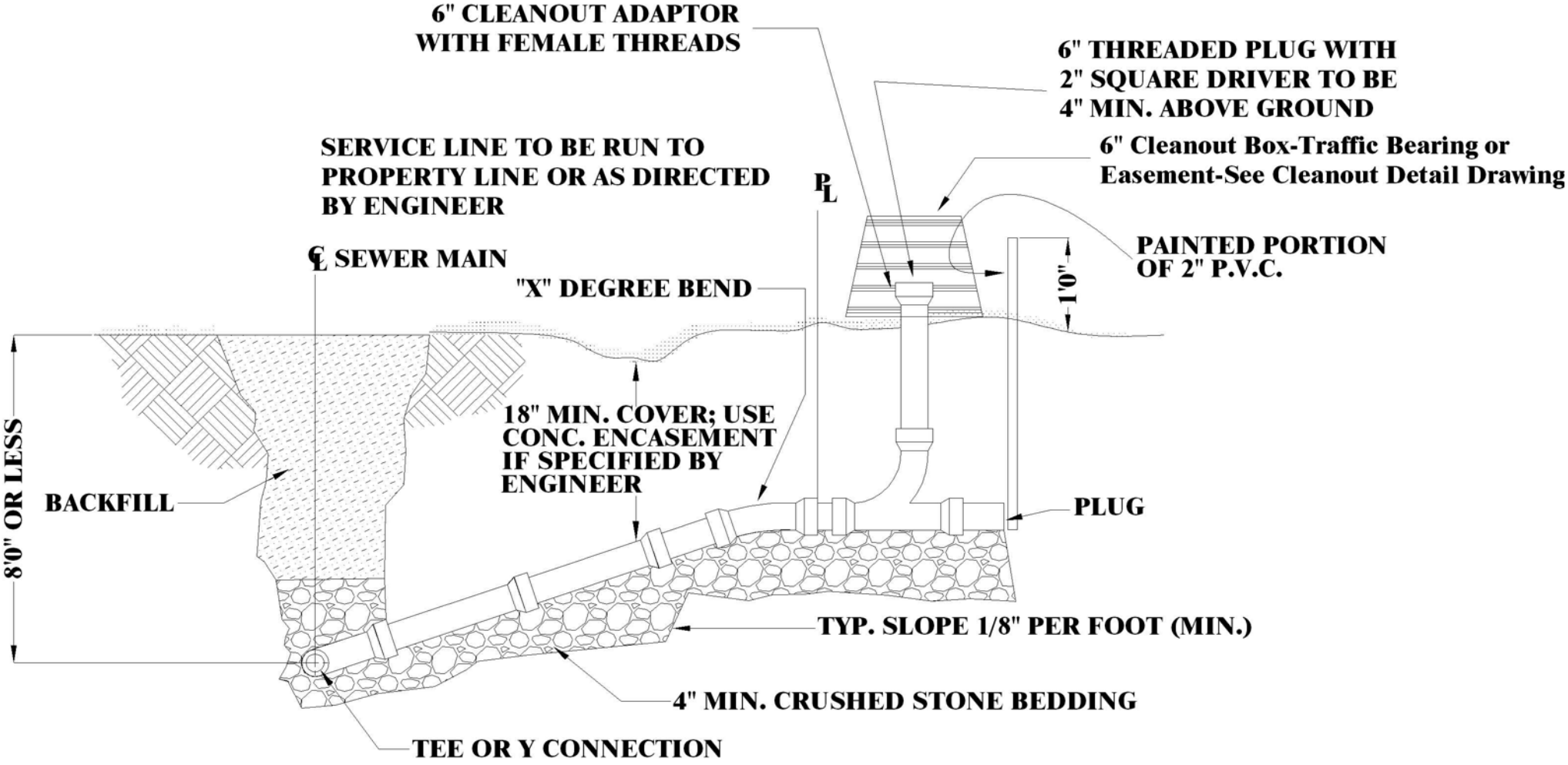

TYPICAL SERVICE LINE DETAIL

1. BACKFILL ON SERVICE LINES TO BE AS DESCRIBED IN PROJECT SPECS.

2. SERVICE LINES FOR DEEP TRENCHES TO BE USED WHERE SHOWN ON PLANS OR AS DIRECTED BY ENGINEER. SERVICE FOR DEEP TRENCHES SHALL BE CONSTRUCTED AS SHOWN IN DETAIL ABOVE IN LIEU OF VERTICAL STACKS ENCASED IN CONCRETE.

3. BATTER BOARDS NO REQUIRED FOR LAYING PIPE, BUT GRADE TO BE REASONABLY UNIFORM AND ALIGNMENT STRAIGHT. GRADE SHALL BE THAT WHICH IS SUFFICIENT TO PROVIDE SERVICE TO BUILDING OR AS DIRECTED BY ENGINEER WITH MINIMUM TO BE THAT ALLOWED BY LOCAL PLUMBING CODE OR 1/8" PER FOOT MINIMUM OR AS NOTED ON PLANS.

4. MARKING ROD SHALL EXTEND FROM BOTTOM OF END OF SERVICE LINE TO 1'0" ABOVE GROUND.

SERVICE LINE TRENCHING DETAILS

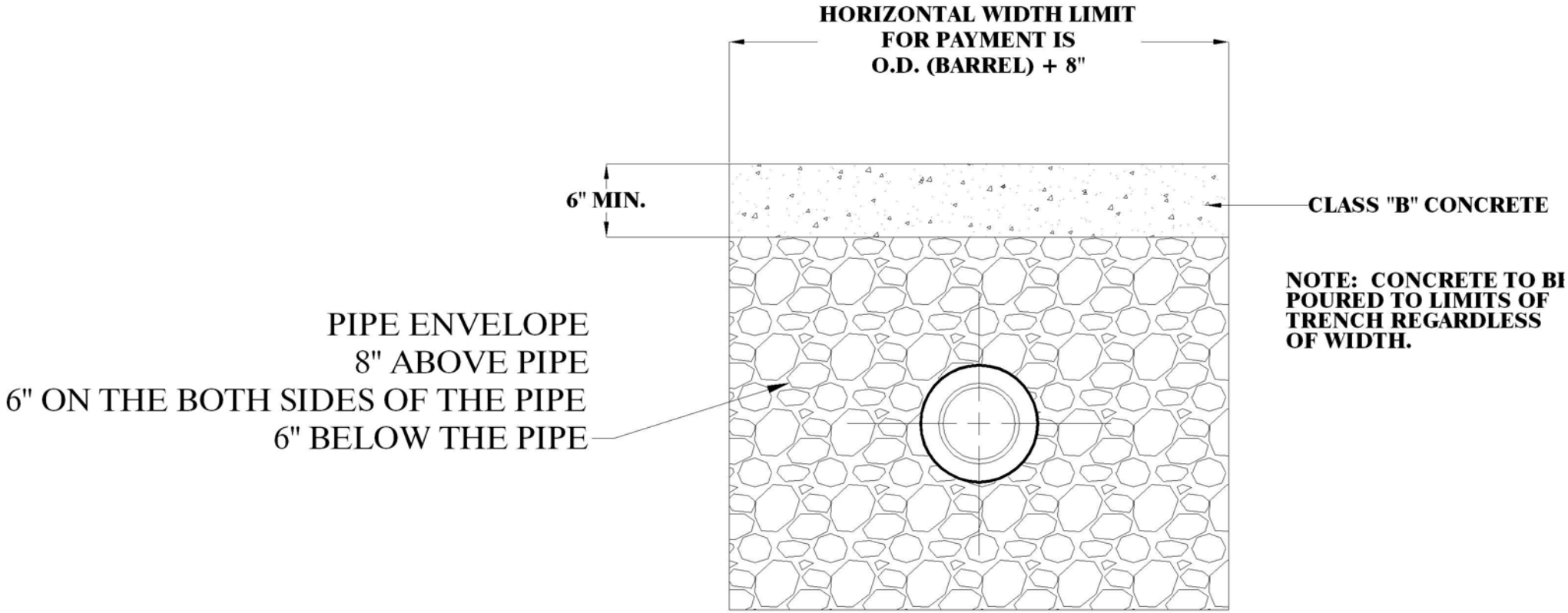

STANDARD CONCRETE CAP

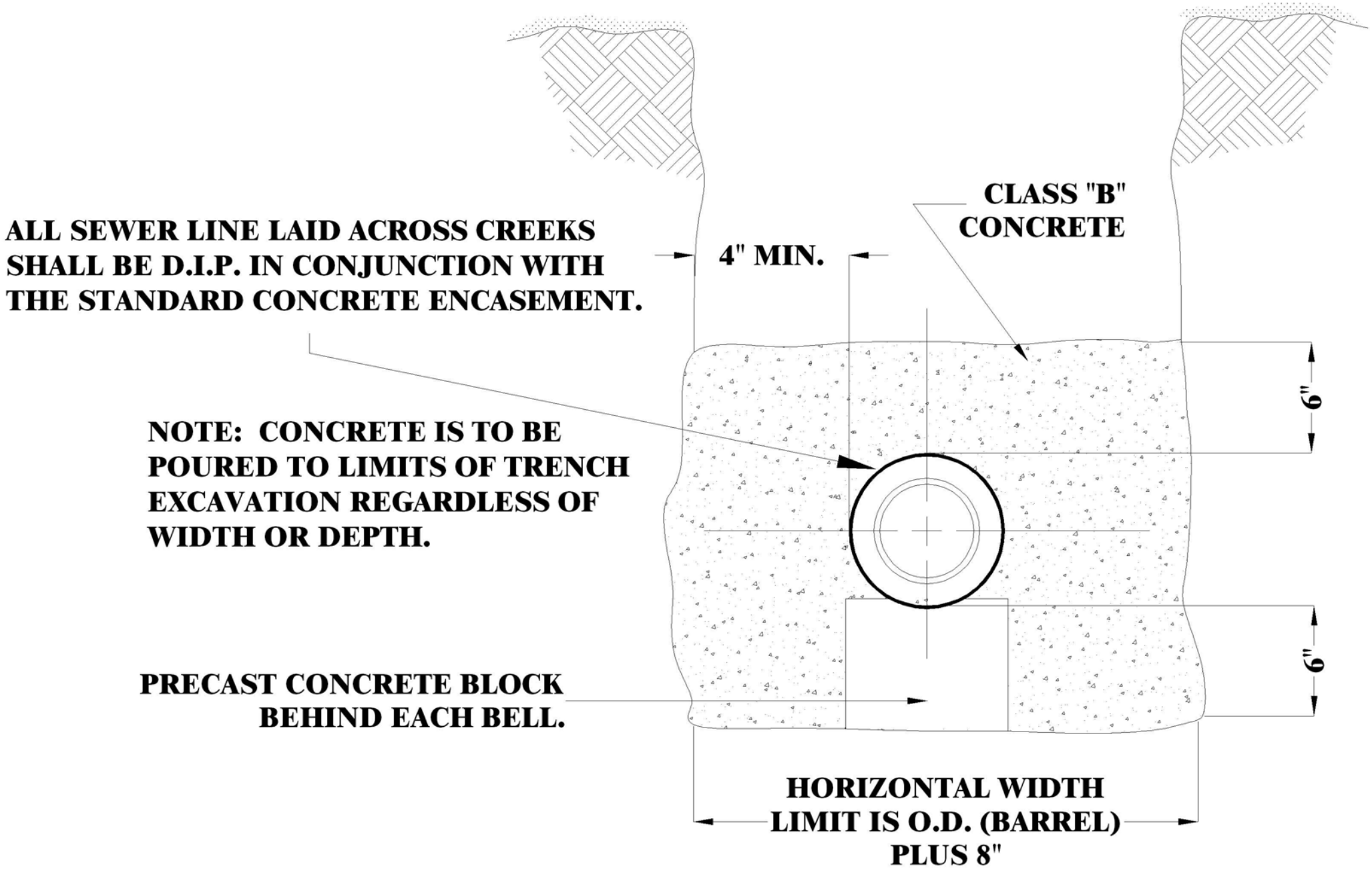

STANDARD CONCRETE ENCASEMENT

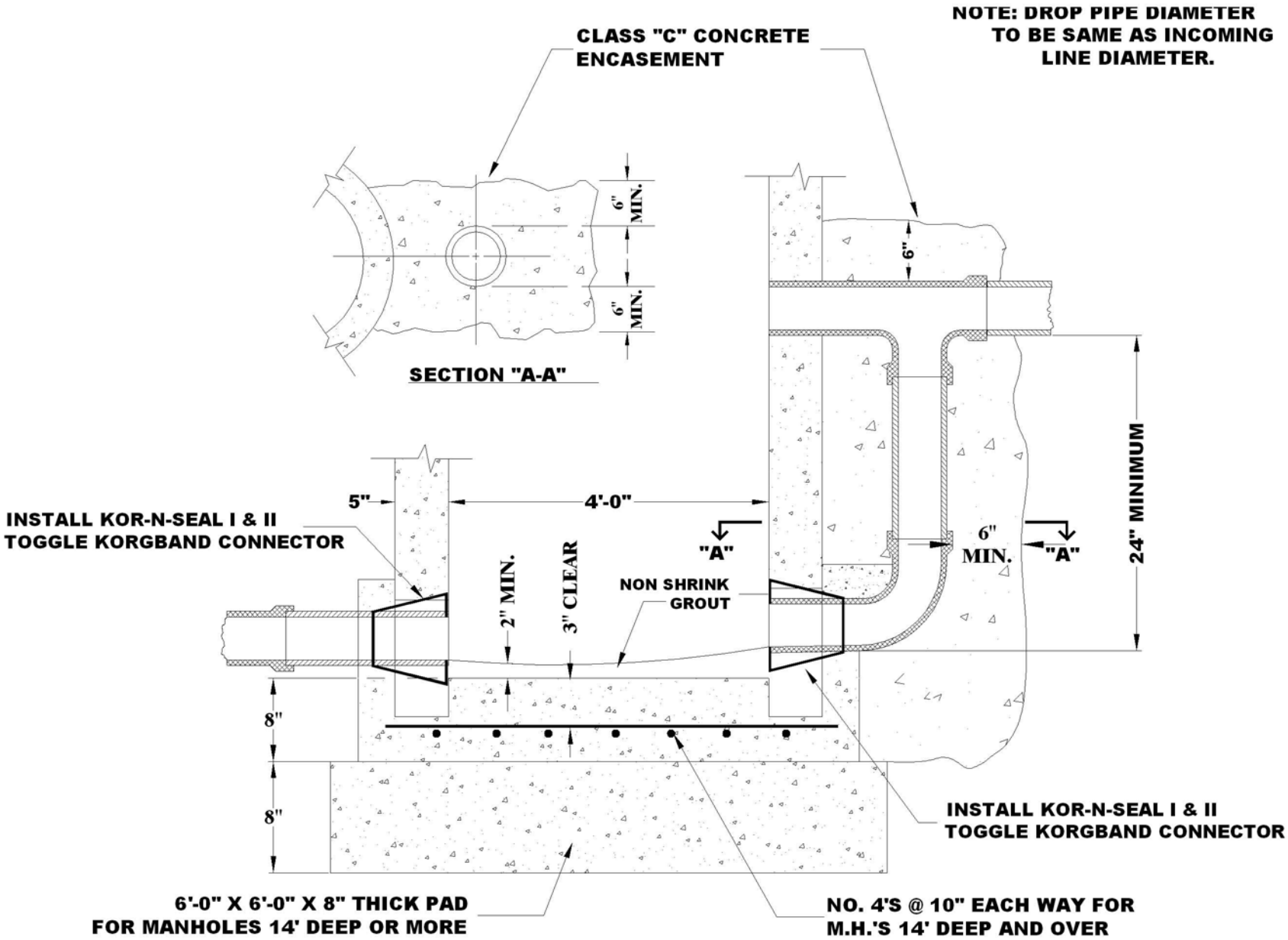

STANDARD DROP STRUCTURE

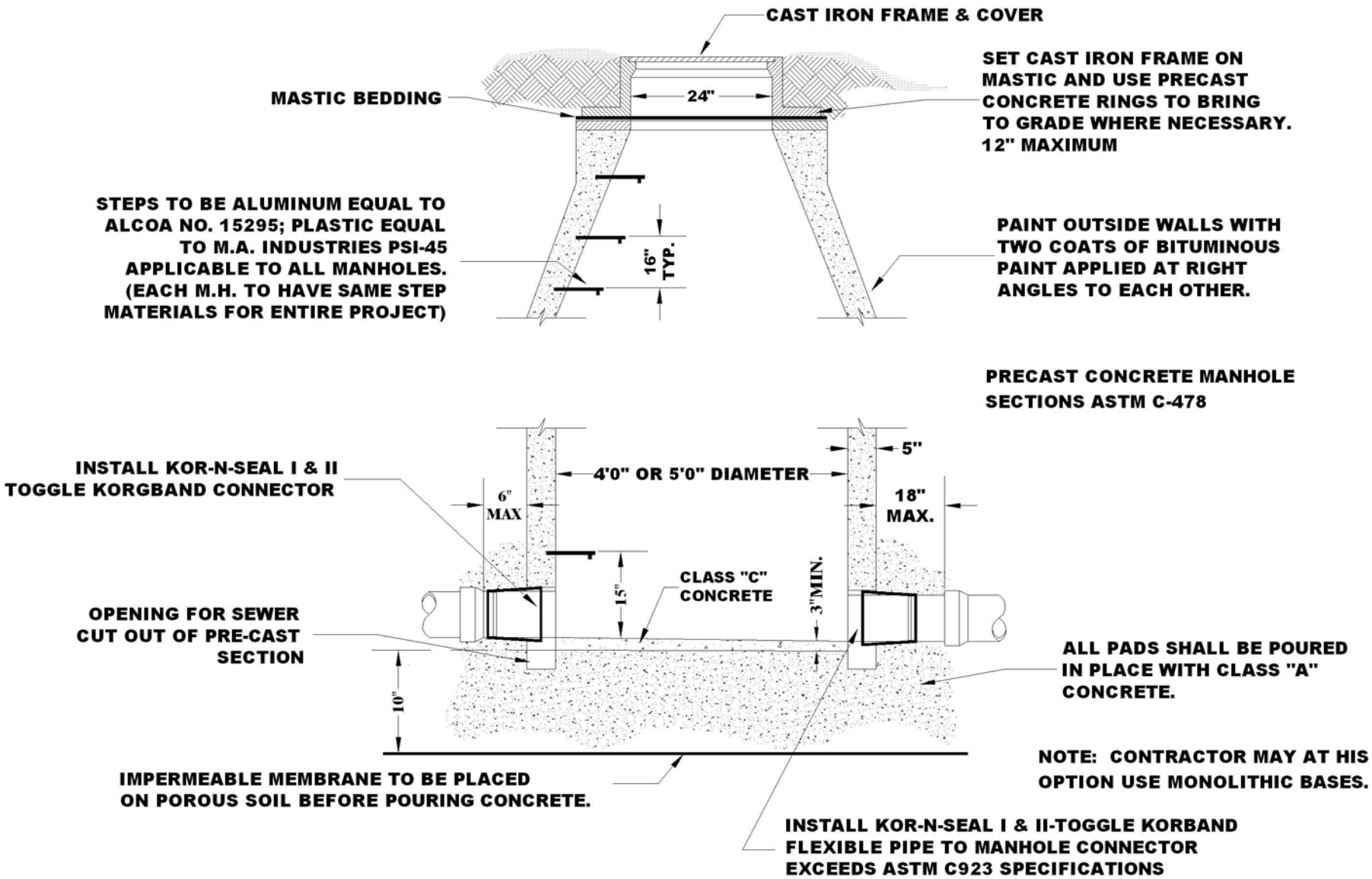

STANDARD PRECAST MANHOLE (A-A)

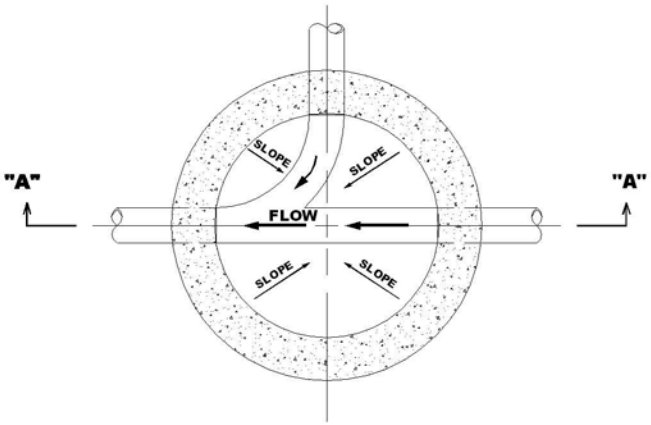

PLAN VIEW

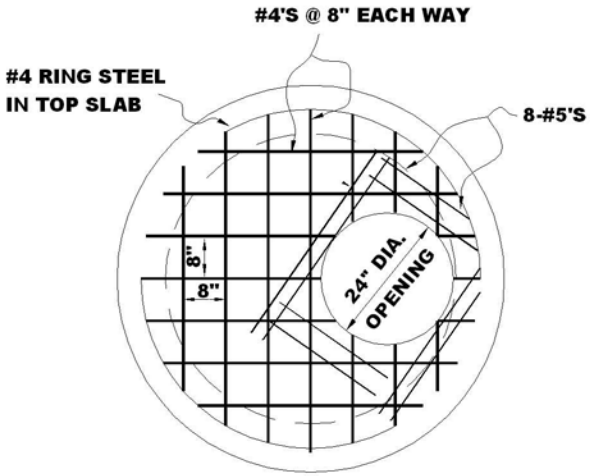

TOP SLAB REINFORCING BARS

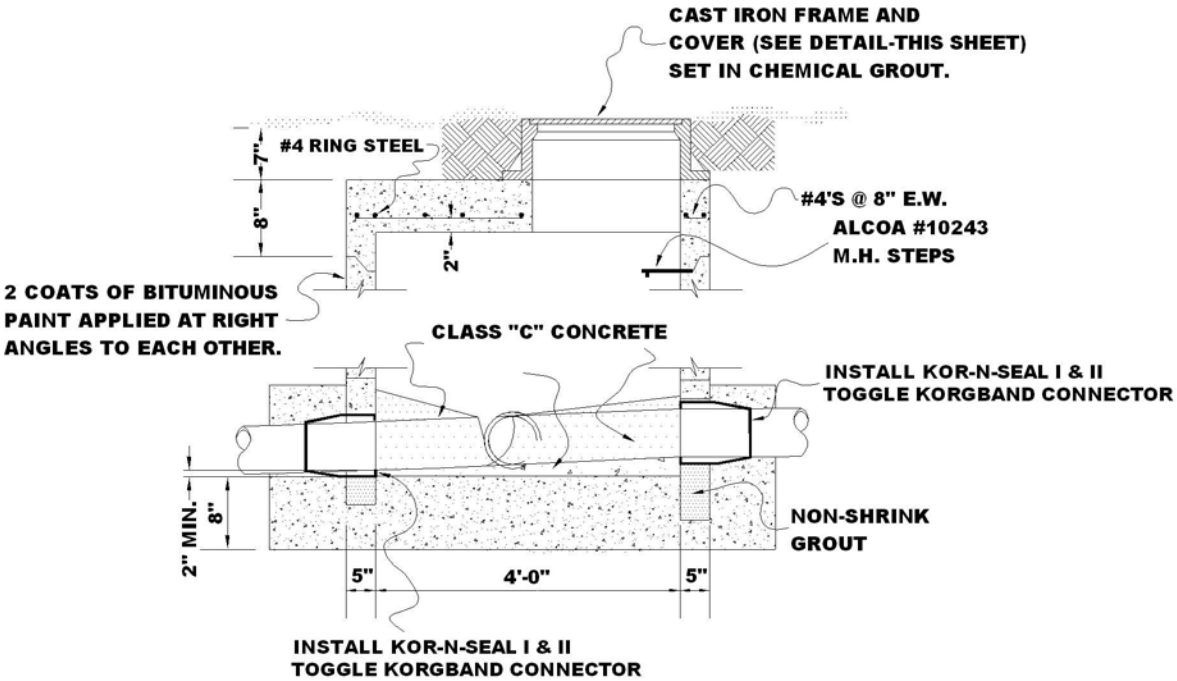

STANDARD SHALLOW MANHOLE (A-A)

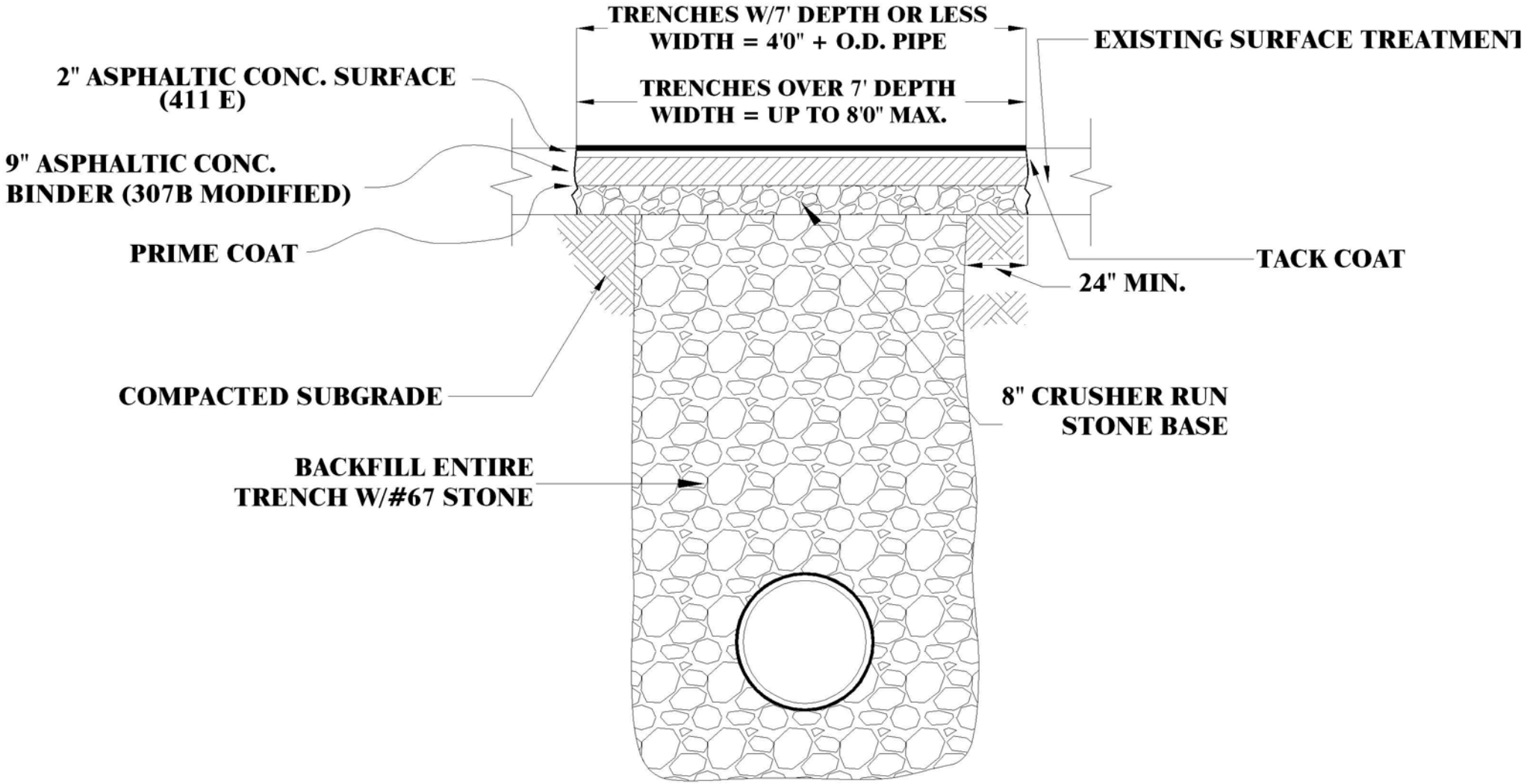

ASPHALTIC CONCRETE SURFACE

TRENCH REPAIR PAVEMENT REPLACEMENT

THE ENTIRE PIPE ENVELOPE SHALL CONSIST OF CRUSHED STONE #67 OR APPROVED EQUAL

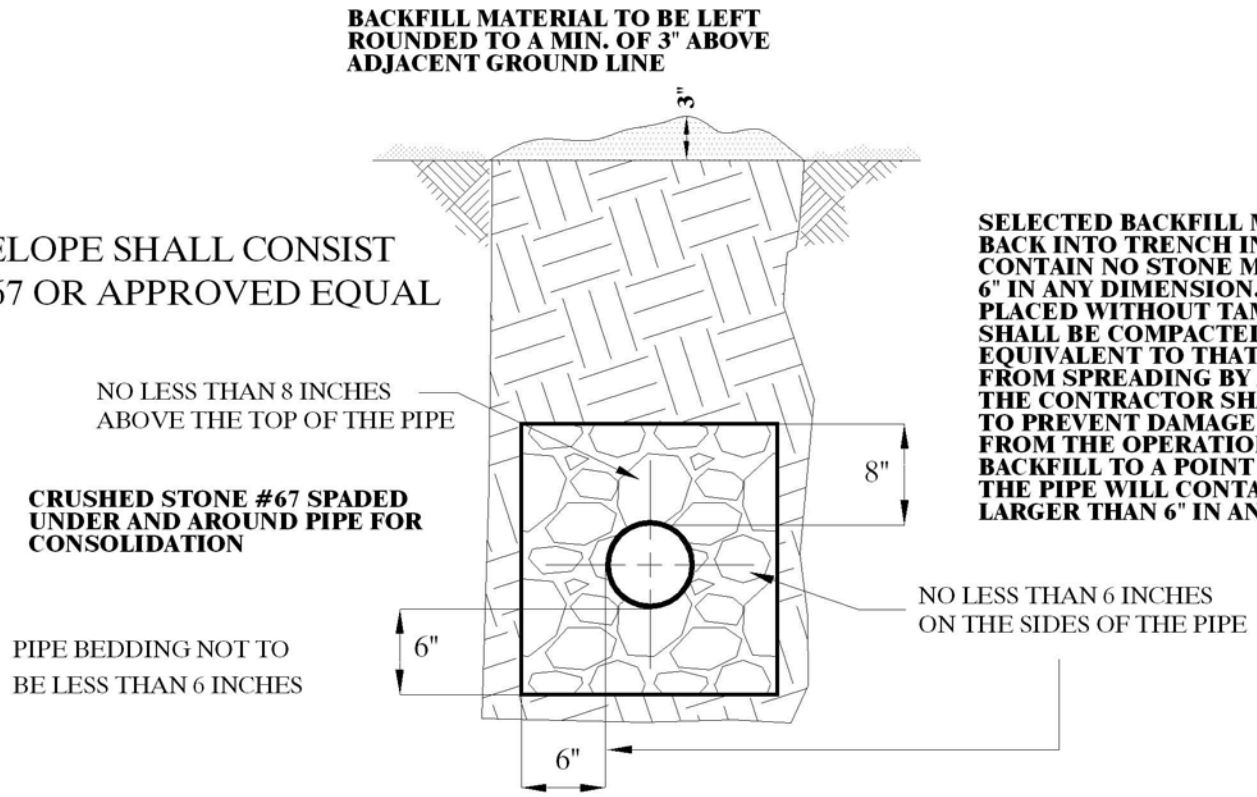

SELECTED BACKFILL MATERIAL TO BE PUT BACK INTO TRENCH IN 12" LIFTS AND SHALL CONTAIN NO STONE MATERIAL LARGER THAN 6" IN ANY DIMENSION. BACKFILL MAY BE PLACED WITHOUT TAMPING, BUT THE BACKFILL SHALL BE COMPACTED TO A DENSITY EQUIVALENT TO THAT WHICH WILL RESULT FROM SPREADING BY A DOZER THEREON. THE CONTRACTOR SHALL EXERCISE CAUTION TO PREVENT DAMAGE TO THE SEWER FROM THE OPERATION OF BACKFILL EQUIPMENT. BACKFILL TO A POINT 24" ABOVE THE TOP OF THE PIPE WILL CONTAIN NO STONE MATERIAL LARGER THAN 6" IN ANY DIMENSION.

TYPICAL TRENCH
NON-TRAFFIC AREAS
OUTSIDE OF ROADWAY

INSERTION OF VENT PIPE INTO MANHOLE

MANHOLE CONE TO BE PRECAST FOR INSERTION OF VENT PIPE OR CONE CAN BE CORE DRILLED. USE KOR-N-SEAL I & II TOGGLE KORGBAND CONNECTOR FOR WATERTIGHT FIT.

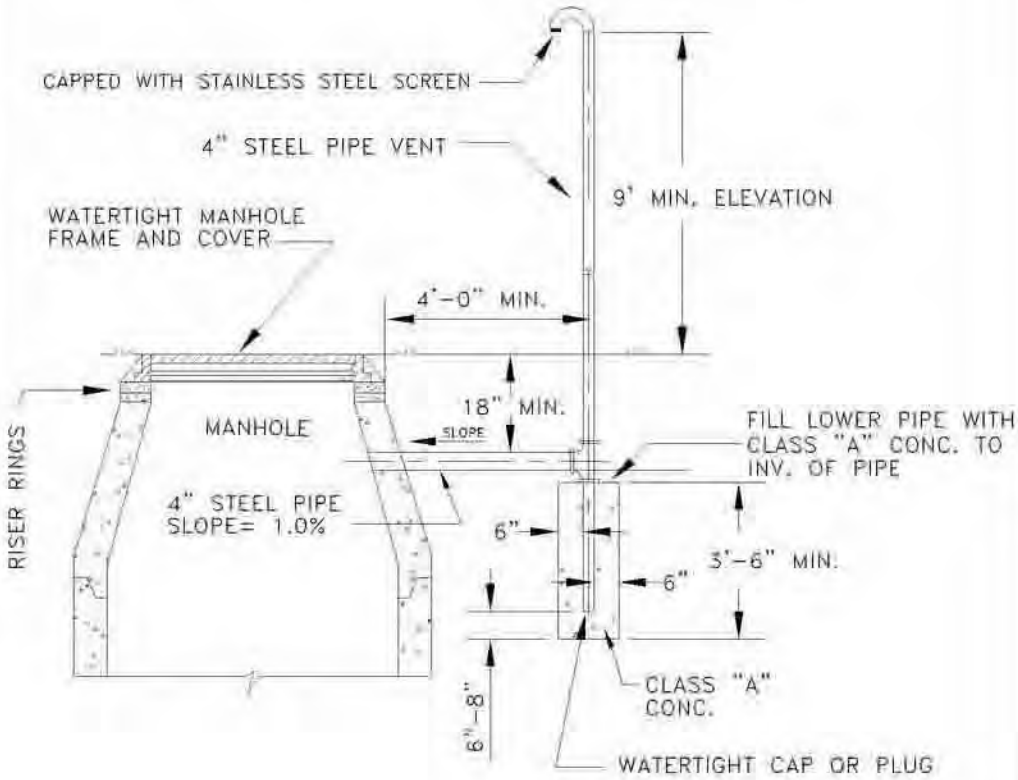

PIPE LOCATION & FINISH

VENT PIPE SHALL BE LOCATED OUT OF A TRAVEL WAY, IN BACK OF A CURB OR SIDEWALK, OR AS CALLED FOR ON PLANS. PIPE SURFACE PREPARATION SHALL BE DONE USING SSPC-SP10 NEAR-WHITE BLAST CLEANING. ONLY ONE COAT IS REQUIRED: TNEMEC 435 PERMA-GLAZE AT 30.0 - 40.0 MILS D.F.T.

CITY OF GOODLETTSVILLE, TENNESSEE SEWER DEPARTMENT	VENT PIPE ASSEMBLY DETAILS	DEPARTMENT OF PUBLIC WORKS Goodlettsville
NOT TO SCALE — 3/1/06		